SACRAMENTO-SAN JOAQUIN DELTA CONSERVANCY
BEES LAKES HABITAT RESTORATION PROJECT

FOR THE CITY OF WEST SACRAMENTO

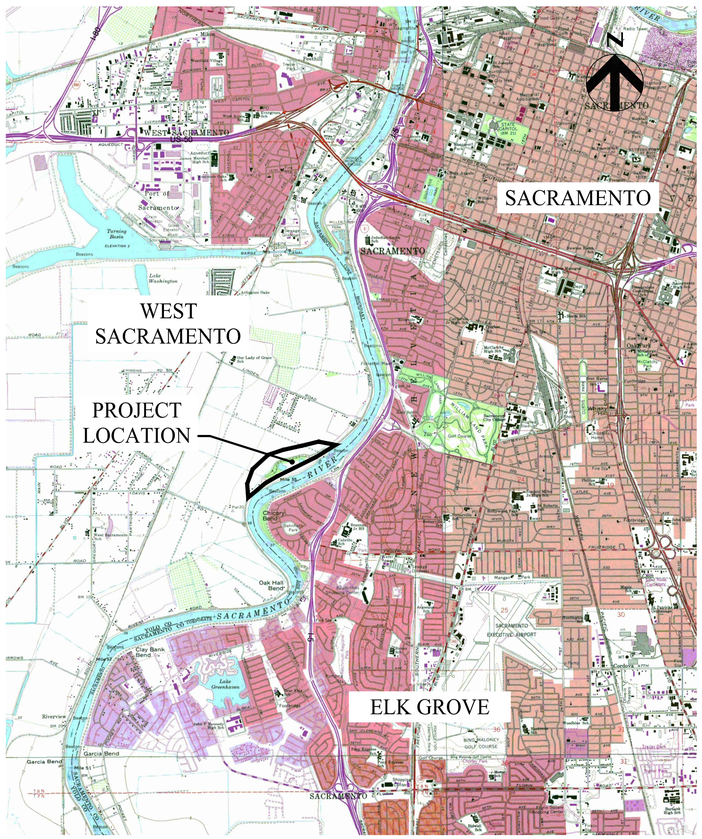

VICINITY MAP
NOT TO SCALE

SACRAMENTO-SAN JOAQUIN DELTA CONSERVANCY
A California State Agency

CITY OF WEST SACRAMENTO

NOVEMBER 2023

90% DESIGN

CONTRACTOR'S NOTE

CONTRACTORS ARE REQUIRED BY LAW TO HAVE A CLASS "A" LICENSE AND REGULATED BY THE CALIFORNIA STATE LICENSE CONTROL BOARD. ANY QUESTIONS CONCERNING A CONTRACTOR MAY BE REFERRED TO:

REGISTRAR CONTRACTOR'S STATE LICENSE BOARD
9821 BUSINESS PARK DRIVE
SACRAMENTO, CA 95827

MAILING ADDRESS:
P.O. BOX 26000
SACRAMENTO, CA 95826

CALIFORNIA STATE LOCATION MAP
NTS

LOCATION MAP
NOT TO SCALE

HDR Engineering Inc.
Folsom, CA

SHEET INDEX

GENERAL

G-01 TITLE SHEET
G-02 SHEET INDEX, ABBREVIATIONS AND LEGEND
G-03 GENERAL NOTES AND CONTACT INFORMATION
G-04 PROJECT SURVEY CONTROL INFORMATION
G-05 ALIGNMENT LINE & CURVE TABLES

G-10 BEES LAKES STAGING AREAS

CIVIL

C-01 BEES LAKES SITE PLAN
C-02 BEES LAKES TRAIL 1 PLAN AND PROFILE
C-03 BEES LAKES TRAIL 2 PLAN AND PROFILE
C-04 TRAIL 4 CONFORM PLAN AND PROFILE
C-05 MULTIPURPOSE TRAIL TO TRAIL 4 CONNECTION TRAIL PLAN AND PROFILE
C-06 BEES LAKES VIEWING PLATFORMS PRIMARY AND SECONDARY PONDS CIVIL SITE PLANS
C-07 BEES LAKES PRIMARY POND VIEWING PLATFORM CIVIL SECTION
C-08 BEES LAKES SECONDARY POND VIEWING PLATFORM CIVIL SECTION
C-09 NOT USED
C-10 BEES LAKES MULTI-PURPOSE TRAIL SOUTHERN ACCESS STATION 0+00 TO 4+00 PLAN AND PROFILE
C-11 BEES LAKES MULTI-PURPOSE TRAIL STATION 4+00 TO 8+00 PLAN AND PROFILE
C-12 BEES LAKES MULTI-PURPOSE TRAIL STATION 8+00 TO 12+00 PLAN AND PROFILE
C-13 BEES LAKES MULTI-PURPOSE TRAIL STATION 12+00 TO 16+00 PLAN AND PROFILE
C-14 BEES LAKES MULTI-PURPOSE TRAIL STATION 16+00 TO 20+00 PLAN AND PROFILE
C-15 BEES LAKES MULTI-PURPOSE TRAIL STATION 20+00 TO 25+00 PLAN AND PROFILE
C-16 BEES LAKES MULTI-PURPOSE TRAIL NORTHERN ACCESS STATION 25+00 TO 30+50 PLAN AND PROFILE
C-17 BEES LAKES TRAIL 1 ABUTMENT 1 GRADING PLAN
C-18 BEES LAKES TRAIL 1 ABUTMENT 2 GRADING PLAN
C-19 BEES LAKES TRAIL 2 ABUTMENT SITE PLANS
C-20 TRAIL DETAILS I
C-21 TRAIL DETAILS II
C-22 SUBDRAIN PLAN AND PROFILE
C-23 DRAINAGE SWALE PLAN, PROFILE, AND SECTION
C-24 TREE REMOVAL AND ESA FENCE DETAILS
C-25 TREE REMOVAL TABLES

C-31 BEES LAKES FLOATING ISLAND SITE PLAN & DETAILS
C-32 BEES LAKES FLOATING STREAMBED SITE PLAN & DETAILS
C-33 FLOATING ISLAND ANCHORING PLAN
C-34 POND AERATION PLAN
C-35 AERATION PLAN DETAILS – POND
C-36 PUMP SHED DETAILS GENERAL
C-37 AERATION DETAILS – LAND
C-38 ELECTRICAL PLAN
C-39 ELECTRICAL DETAILS

C-40 SECTIONS (CHICORY LOOP ALIGNMENT) STA 185+50 TO STA 191+00
C-41 SECTIONS (CHICORY LOOP ALIGNMENT) STA 191+50 TO STA 197+00
C-42 SECTIONS (CHICORY LOOP ALIGNMENT) STA 197+50 TO STA 203+00
C-43 SECTIONS (CHICORY LOOP ALIGNMENT) STA 203+50 TO STA 209+00
C-44 SECTIONS (CHICORY LOOP ALIGNMENT) STA 209+50 TO STA 215+00

ARCHITECTURAL

A-10 BEES LAKES MAIN POND VIEWING PLATFORM PLAN
A-11 BEES LAKES MAIN POND VIEWING PLATFORM SECTION
A-12 BEES LAKES MAIN POND VIEWING PLATFORM ENLARGED PLANS

A-20 BEES LAKES BOARDWALK / RETAINING BUTTRESS PARTIAL PLAN
A-21 BEES LAKES BOARDWALK / RETAINING BUTTRESS SECTIONS
A-22 BEES LAKES BOARDWALK / RETAINING BUTTRESS ELEVATION

A-30 BEES LAKES ARCHITECTURAL DETAILS I
A-31 BEES LAKES ARCHITECTURAL DETAILS II

STRUCTURAL

S-01 STRUCTURAL NOTES
S-02 BEES LAKES TYPICAL CONCRETE DETAILS
S-03 BEES LAKES TYPICAL CONCRETE REINFORCEMENT DETAILS
S-04 BEES LAKES CONCRETE PILE TYPICAL DETAILS/SCHEDULE
S-05 BEES LAKES WOOD FRAMING NOTES AND DETAILS
S-06 BEES LAKES TRAIL 1 FOUNDATION PLAN AND PROFILE
S-07 BEES LAKES TRAIL 2 FOUNDATION PLAN AND PROFILE
S-08 BEES LAKES PARTIAL PLAN AT BOARDWALK RETAINING BUTTRESS
S-09 BEES LAKES SECTIONS AND DETAILS – BOARDWALK
S-10 BEES LAKES PILE AND FRAMING PLAN AND SECTION – VIEWING PLATFORM
S-11 BEES LAKES SECTIONS AND DETAILS – VIEWING PLATFORM
S-12 BEES LAKES KIOSK PLAN
S-13 BEES LAKES KIOSK SECTIONS

LANDSCAPE & PLANTING

L-01 PLANTING NOTES
L-02 PLANT AND SEEDING MATRIX
L-03 PLANTING PLAN
L-04 RIPARIAN WOODLAND PLANTING DETAILS
L-05 FLOATING WETLAND ISLANDS PLANTING DETAILS

TRANSPORTATION

T-01 BEES LAKES PARKING AREA SITE PLAN
T-02 BEES LAKES PARKING AREA SECTIONS

SCREENED SHEETS NOT PART OF 90% PLANS

ABBREVIATIONS

AB	AGGREGATE BASE
ABND	ABANDON
AC	ASPHALTIC CEMENT CONCRETE
AGGR	AGGREGATE
ALT	ALTERNATE
APN	ASSESSOR PARCEL NUMBER
APPROX	APPROXIMATE
ASPH	ASPHALT
ASTM	AMERICAN SOCIETY FOR TESTING AND MATERIALS
AVE	AVENUE
AVG	AVERAGE
BB	BEGINNING OF BRIDGE
BC	BACK OF CURB, BEGIN CURVE
BL	BASELINE
BLDG	BUILDING
BLVD	BOULEVARD
BM	BENCHMARK
BOP	BEGINNING OF PROJECT
BS	BOTH SIDES
BTW	BETWEEN
CA	CALIFORNIA
C&G	CURB & GUTTER
CB	CATCH BASIN
CF	CUBIC FEET (FOOT)
CFH	CUBIC FEET PER HOUR
CFM	CUBIC FEET PER MINUTE
CFS	CUBIC FEET PER SECOND
CIDHP	CAST IN DRILLED HOLE PILES
℄	CENTERLINE
CL	CLASS
CLR	CLEAR
CMP	CORRUGATED METAL PIPE
COMM	COMMUNICATION
CONT	CONTINUOUS
CORR	CORRIDOR
CONST	CONSTRUCTION
CP	CONTROL POINT, CATCH POINT
C.S.P.	CORRUGATED STEEL PIPE
CVT	CULVERT
CU	CUBIC
CY	CUBIC YARD
DBL	DOUBLE
DG	DECOMPOSED GRANITE
DEG	DEGREE
DEMO	DEMOLITION
DET	DETAIL
DI	DROP INLET
DIA	DIAMETER
DIM	DIMENSION
DIST	DISTANCE, DISTRIBUTION
DTL	DETAIL
DWG	DRAWING
E	EAST
EA	EACH
EB	EDGE OF BRIDGE
EG	EXISTING GRADE
E, ELEC	ELECTRICAL
EL	ELEVATION
ENGR	ENGINEER
EOF	EDGE OF FILL
EP, EOP	EDGE OF PAVEMENT
EQUIP	EQUIPMENT
ES	EDGE OF SHOULDER
ETW	EDGE OF TRAVELED WAY
EX, EXIST	EXISTING
FC	FACE OF CURB
FG	FINISHED GRADE
FIG	FIGURE
FL	FLOW, FLOW LINE
FM	FORCE MAIN
FNC	FENCE
FT	FEET, FOOT
FT/FT	FOOT PER FOOT
GB	GRADE BREAK
GND	GROUND
GP	GUY POLE
GR	GRADE
H, HORIZ	HORIZONTAL
HMA	HOT MIXED ASPHAULT
HP	HIGH POINT, HINGE POINT
HT	HEIGHT
HWY	HIGHWAY
ID	INSIDE DIAMETER
INV	INVERT ELEVATION
IN	INCH, INCHES
JB	JUNCTION BOX
L	LEFT, LENGTH
LB, LBS	POUND(S)
LF	LINEAR FOOT (FEET)
LOC	LOCATION
MAINT	MAINTENANCE
MAX	MAXIMUM
MH	MANHOLE
MIN	MINIMUM
MNMT	MONUMENT (SURVEY)
MW	MONITORING WELL
N	NORTH
NAD	NORTH AMERICAN DATUM
NGVD	NATIONAL GEODETIC VERTICAL DATUM
NO.	NUMBER
NTS	NOT TO SCALE
O&M	OPERATIONS AND MAINTENANCE
O.C	ON CENTER
OD	OUTSIDE DIAMETER
OH	OVERHEAD
OHE	OVERHEAD ELECTRICAL
OHWM	ORDINARY HIGH WATER MARK
PC	POINT OF CURVE
PCF	POUNDS PER CUBIC FOOT
PERM	PERMANENT
PG	PROFILE GRADE
PG&E	PACIFIC GAS & ELECTRIC
PI	POINT OF INTERSECTION
PL	PROPERTY LINE
P&C	POST AND CABLE FENCE
POC	POINT OF CURVE
POE	POINT OF ENDING
PP	POWER POLE
PRC	POINT OF REVERSE CURVE
PSF	POUNDS PER SQUARE FOOT
PSI	POUNDS PER SQUARE INCH
PSIA	POUNDS PER SQUARE INCH ABSOLUTE
PSIG	POUNDS PER SQUARE INCH GAGE
PT (PT)	POINT OF TANGENCY
PVC	POLYVINYL CHLORIDE
PVI	POINT OF VERTICAL INTERSECTION
PVMT	PAVEMENT
PZ	PIEZOMETER
QTY	QUANTITY
R	RIGHT, RADIUS,
RCP	REINFORCED CONCRETE PIPE
R/W	RIGHT OF WAY
RD	ROAD
RM	RIVER MILE
RSP	ROCK SLOPE PROTECTION
RW	RELIEF WELL
S	SOUTH/SLOPE
SAC	SACRAMENTO
SCHED, SCH	SCHEDULE
SD	STORM DRAIN
SHLD	SHOULDER
SHT	SHEET
SPEC	SPECIFICATION
SS	SANITARY SEWER
SSMH	SANITARY SEWER MANHOLE
ST	STREET
STA	STATION
STD	STANDARD
STL	STEEL
SYM	SYMBOL
TBM	TEMPORARY BENCHMARK
TCE	TEMPORARY CONSTRUCTION EASEMENT
T, TEL	TELEPHONE
TEMP	TEMPORARY
THK	THICK
TOC	TOP OF CURB, TOP OF CONCRETE
TOF	TOP OF FILL
TOL	TOP OF LEVEE
TOPO	TOPOGRAPHY
TOW	TOP OF WALL
TYP	TYPICAL
UG	UNDERGROUND
UTIL, UTL	UTILITY
VC	VERTICAL CURVE
V, VERT	VERTICAL
VPC	VERTICAL POINT OF CURVATURE
VPI	VERTICAL POINT OF INTERSECTION
VPT	VERTICAL POINT OF TANGENCY
W	WEST
WHP	WATERSIDE HINGE POINT
WSAFCA	WEST SACRAMENTO AREA FLOOD CONTROL AGENCY
WSE	WATER SURFACE ELEVATION
W/	WITH
W/O	WITHOUT
XSECT	CROSS SECTION
YD	YARD
YR	YEAR

SITE PLAN SYMBOLOGY

EXISTING FEATURES

- 20 — CONTOUR
- POST & CABLE FENCE
- x — FENCE
- SD — STORM DRAIN LINE
- OHE — OVERHEAD ELECTRICAL
- E — ELECTRICAL LINE
- T — TELEPHONE LINE
- SWALE FLOWLINE
- PROPERTY LINE
- D — STORM DRAIN MANHOLE
- POWER POLE
- POWER POLE GUY WIRE
- EXISTING SURVEY BENCH MARK
- TREE REMOVAL
- EXISTING TREE
- EXISTING ELDERBERRY SHRUB
- ELDERBERRY SHRUB REMOVAL
- EXISTING CLUSTER OF ELDERBERRY SHRUBS
- EXISTING TREE CANOPY
- EXISTING CLUSTER OF TREES

PROPOSED FEATURES

- FILL SLOPE
- CUT SLOPE
- SD — STORM DRAIN LINE
- SWALE FLOWLINE
- 20 — CONTOUR
- ACCESS ROUTE DIRECTION ARROWS
- CENTERLINE / BASELINE
- PROPERTY LINE
- EDGE OF TRAIL
- ESA FENCING
- CONSTRUCTION LIMIT/CONSTRUCTION AREA
- RD900 FLOOD EASEMENT
- CB — STORM DRAIN INLET
- 1 — COORDINATE POINTS

GENERAL SYMBOLOGY

N

ARROW INDICATES DIRECTION OF PLAN NORTH

PLAN
1" = 100'

SECTION LETTER
FLAG INDICATES DIRECTION OF SECTION CUT
X
XXX
* DRAWING WHERE SECTION VIEW IS LOCATED

SECTION CUT MARKER

SECTION
1" = 400'

SECTION LETTER
X
XXX
* DRAWING WHERE SECTION VIEW IS FIRST CUT

DETAIL NUMBER
X
XXX
* DRAWING WHERE DETAIL IS LOCATED

DETAIL MARKER

DETAIL
1" = 1'

DETAIL NUMBER
X
XXX
* DRAWING WHERE DETAIL WAS TAKEN

90% DESIGN

C:\PWWORKING\WEST01\D2918499\G-02.DWG
December 8, 2023

Issue No.	Description	Date	Drwn.	Chkd.	Resp. Engr.	Proj. Mgr.
–	–	–	–	–	–	–

HORIZONTAL DATUM IS THE CALIFORNIA COORDINATE SYSTEM, ZONE 2 (NAD 83)

VERTICAL DATUM IS NAVD 88

EL NAVD 88 =
EL NGVD 29+2.6'

HDR Engineering, Inc.

BAR LENGTH ON ORIGINAL DRAWING EQUALS ONE INCH. ADJUST SCALE ACCORDINGLY.

Project Manager: K. JAMESON
Designed: V. RUSSO
Designed: X
Checked: K. FELLOWS
Drawn: V. RUSSO

SACRAMENTO-SAN JOAQUIN DELTA CONSERVANCY
BEES LAKES HABITAT RESTORATION PROJECT

SHEET INDEX, ABBREVIATIONS AND LEGEND

Date	Project No.	Drawing No.	Issue
NOVEMBER, 2023	3223-10358905	G-02	X
Scale: NOT TO SCALE	File Name: G-02.DWG		

GENERAL NOTES

1. THE CONTRACTOR MUST BE SOLELY AND COMPLETELY RESPONSIBLE FOR FURNISHING AND MAINTAINING ALL WARNING SIGNS, DEVICES, AND FEATURES NECESSARY TO PROTECT THE HEALTH AND SAFETY OF THE GENERAL PUBLIC AND WORKERS AND TO PROVE FOR THE PROPER AND SAFE ROUTING OF VEHICULAR AND PEDESTRIAN TRAFFIC DURING THE PERFORMANCE OF THE WORK.
2. THE CONTRACTOR MUST BE RESPONSIBLE FOR COMPLIANCE WITH ALL APPLICABLE FEDERAL, STATE AND LOCAL LAWS, RULES AND REGULATIONS APPLICABLE TO ALL WORK PERFORMED UNDER THE CONTRACT.
3. THE CONTRACTOR MUST PROVIDE EROSION AND SEDIMENT CONTROL IN ACCORDANCE WITH APPROVED STORM WATER POLLUTION PREVENTION PLAN (SWPPP).
4. THE CONTRACTOR MUST VERIFY ALL DIMENSIONS, SIZES, AND LOCATIONS OF ALL EXISTING FACILITIES AND FEATURES BEFORE STARTING WORK AND MUST IMMEDIATELY NOTIFY THE ENGINEER OF ANY DISCREPANCIES.
5. ALL CONSTRUCTION MATERIALS MUST CONFORM TO THE CONTRACT SPECIFICATIONS.
6. UTILITY INFORMATION WAS COMPILED FROM DATA PROVIDED BY THE UTILITY OWNERS AND LOCATIONS ARE APPROXIMATE. THE ACTUAL LOCATIONS AND ELEVATIONS OF THE EXISTING UTILITIES MUST BE VERIFIED BY THE CONTRACTOR. ALL EXISTING UNDERGROUND AND OVERHEAD UTILITIES MUST BE PROTECTED FROM CONSTRUCTION EQUIPMENT AND OPERATIONS.
7. THE CONTRACTOR MUST BE RESPONSIBLE FOR MAINTAINING RECORD DRAWINGS FOR ALL WORK THROUGHOUT THE COURSE OF CONSTRUCTION. SUCH DRAWINGS MUST RECORD THE LOCATION AND GRADE OF ALL IMPROVEMENTS AND FILLS THAT ARE CONSTRUCTED AND HARD AND ELECTRONIC COPIES MUST BE DELIVERED TO THE CONSTRUCTION MANAGER PRIOR TO THE ACCEPTANCE OF THE WORK AS INDICATED IN THE SPECIFICATIONS.
8. DRAWINGS SHOWN WITH SURVEY TOPOGRAPHY ARE PROVIDED FOR REFERENCE ONLY. ALL FACILITIES MAY NOT BE SHOWN ON PLANS. THE CONTRACTOR MUST SATISFY THEMSELVES AS TO THE LOCATION OF EXISTING FACILITIES THAT MAY BE AFFECTED BY CONSTRUCTION. THE EXISTING TOPOGRAPHICAL AND PLANIMETRIC SURVEY WAS PERFORMED BY MORROW SURVEYING, INC. BETWEEN 2014 AND 2016 IN SUPPORT OF THE CONSTRUCTION OF THE SOUTHPORT SETBACK LEVEE. ACTUAL SITE CONDITIONS HAVE CHANGED SINCE THE PERFORMANCE OF THE SURVEY. VEGETATION WITHIN THE BEES LAKE PROJECT AREA VARIES BY SEASON AND HAS PROPAGATED BEYOND THE EXTENTS SHOWN BY THE PLANIMETRIC SURVEY. ONLY CLEAR AND GRUB EXISTING VEGETATION THAT IS WITHIN THE PROJECT CONSTRUCTION LIMIT AND THAT OF WHICH IS NECESSARY TO CONSTRUCT THE PROJECT FACILITIES. A TREE PERMIT IS REQUIRED FROM THE CITY OF WEST SACRAMENTO PRIOR TO ANY TREE REMOVAL.
9. DUST CONTROL AND STREET CLEANING MUST BE MAINTAINED AT ALL TIMES.
10. FOR COMPLETE PROJECT CONTROL DATA, SEE MORROW SURVEYING, INC. SACRAMENTO RIVER SOUTH LEVEE SURVEY CONTROL PROJECT REPORT, WSAFCA SURVEY CONTROL 2014.

EROSION CONTROL AND WINTERIZATION

1. IT IS THE RESPONSIBILITY OF THE CONTRACTOR TO PREVENT DISCHARGE OF SEDIMENT FROM THE SITE TO ANY WATER COURSE, DRAINAGE SYSTEM, OR ONTO ADJACENT PROPERTIES AND TO PREVENT DAMAGE BY EROSION OR DEPOSITION OF SEDIMENT WHICH MAY RESULT FROM THE WORK.
2. THE CONTRACTOR MUST COMPLY WITH ALL FEDERAL, STATE AND LOCAL GOVERNMENT LAWS AND REGULATIONS RELATING TO THE DISCHARGE OF STORM WATER RUN OFF ASSOCIATED WITH CONSTRUCTION ACTIVITIES WHETHER OR NOT THE REQUIRED WORKS OR METHODS ARE STATED ON THESE PLANS.
3. THE CONTRACTOR MUST CONDUCT INSPECTIONS OF THE SITE BEFORE AND AFTER STORM EVENTS AND ONCE EACH 24–HOUR PERIOD DURING EXTENDED STORM EVENTS TO IDENTIFY BMP EFFECTIVENESS AND IMPLEMENT REPAIRS OR DESIGN CHANGES AS FEASIBLE DEPENDING UPON FIELD CONDITIONS.
4. THE CONTRACTOR MUST HAVE THE SWPPP FOR THE PROJECT ONSITE AT ALL TIMES.

CITY OF WEST SACRAMENTO CIVIL SITE PLAN GENERAL NOTES

1. ALL PUBLIC IMPROVEMENT CONSTRUCTION MUST CONFORM TO THE CITY OF WEST SACRAMENTO STANDARD SPECIFICATIONS AND MUST BE SUBJECT TO A CITY ENCROACHMENT PERMIT.
2. WORK MUST INCLUDE REPLACEMENT OF ALL BROKEN PUBLIC SIDEWALK, CURB AND GUTTER. THIS WORK SHOULD TAKE PLACE WHEN THERE IS NO FURTHER NEED FOR ENCROACHMENT OF HEAVY EQUIPMENT OVER WALKS AND PRIOR TO CITY APPROVAL OF THE BUILDING FOR OCCUPANCY. THE ENGINEERING DIVISION INSPECTOR WILL MARK ALL BROEKN CURB, GUTTER AND SIDEWALK FOR REPLACEMENT UPON REQUEST.
3. A FIRE HYDRANT PERMIT WILL BE REQUIRED FOR CONSTRUCTION WATER THROUGH ANY FIRE HYDRANT WITHIN THE CITY. CONTACT PUBLIC WORKS AT (916) 617–4850 FOR REQUIREMENTS.
4. CONTRACTOR MUST ADHERE TO WORKING HOURS OF 7 AM THROUGH 5 PM MONDAY THROUGH FRIDAY, EXCLUDING CITY HOLIDAYS AND WORKING HOURS OF 8 AM TO 5 PM SATURDAY. CONSTRUCTION OUTSIDE OF WORKING HOURS, OR ON SUNDAYS OR CITY HOLIDAYS MAY BE ALLOWED UPON PRIOR APPROVAL BY THE CITY ENGINEER. HOWEVER, SUNDAY AND CITY HOLIDAY WORK MUST BE LIMITED TO X AM TO X PM UNLESS PRIOR APPROVAL IN WRITING IS OBTAINED FROM THE CITY ENGINEER. NIGHT WORK MUST COMPLY WITH ALL CALTRANS STANDARDS FOR SUCH WORK.
5. CONTRACTOR MUST GIVE THE CITY'S CONSTRUCTION INSPECTOR A MINIMUM OF TWO WORKING DAYS NOTICE OF INTENT TO WORK OUTSIDE OF NORMAL WORKING HOURS.
6. THE CONTRACTOR IS RESPONSIBLE FOR TEMPORARY EROSION CONTROL AT ALL TIMES. TEMPORARY EROSION CONTROL MUST CONSIST OF, BUT NOT BE LIMITED TO, CONSTRUCTING SUCH FACILITIES AND TAKING SUCH MEASURES AS ARE NECESSARY TO PREVENT, CONTROL AND ABATE WATER, MUD AND EROSION DAMAGE TO PUBLIC AND PRIVATE PROPERTY AS A RESULT OF THE PROJECT. MUD AND SILT MUST BE SETTLED OUT OF THE STORM RUNOFF BEFORE SAID RUNOFF LEAVES THE CONSTRUCTION STIE OR ENTERS THE CITY STORM DRAIN SYSTEMS, OR NATURAL CHANNEL.
7. ANY WATER ENTERING THE SANITARY SEWER SYSTEM TO BE CONSTRUCTED UNDER THE APPROVED PLANS MUST NOT BE DISCHARGED TO THE EXISTING SEWER SYSTEM. PLUGS WILL BE INSTALLED IN EXISTING MANHOLES AS NECESSARY TO PERMIT PUMPING THE NEW SYSTEM CLEAR OF WATER AND DEBRIS PRIOR TO ACCEPTANCE BY THE CITY. CARE MUST BE EXERCISED IN LOCATING PLUGS TO AVOID INTERRUPTING SERVICE TO EXISTING CONNECTIONS. MECHANICAL PLUGS OR MORTAR AND BRICK MUST BE USED. INFLATABLE DEVICES ARE NOT ALLOWED.
8. LOCATIONS OF PERMANENT TRAFFIC CONTROL SIGNING AND POSTS SHOWN ON PLANS ARE SCHEMATIC. FINAL LOCATIONS MUST BE APPROVED BY THE ENGINEERING DIVISION TRAFFIC/TRANSPORTATION SECTION IN THE FIELD PRIOR TO INSTALLATION.
9. THE CONTRACTOR MUST OBTAIN A TREE PERMIT FROM THE CITY OF WEST SACRAMENTO PRIOR TO REMOVAL OF TREES FOR THE PROJECT.

ELDERBERRY SHRUBS NOTES

1. ELDERBERRY SHRUB LOCATIONS SHOWN ARE BASED ON FIELD SURVEYS CONDUCTED IN 2023 BY GEI. DUE DILIGENCE WAS TAKEN TO IDENTIFY ELDERBERRY SHRUBS WITHIN THE PROJECT AREA HOWEVER THE SITE IS HEAVILY VEGETATED AND THE ELDERBERRY DATA COLLECTED WAS DONE AS BEST AS PRACTICABLE TO MINIMIZE IMPACTS TO EXISTING VEGETATION. REPORT TO THE CITY ANY ADDITIONAL ELDERBERRY SHRUBS ENCOUNTERED DURING CONSTRUCTION NOT SHOWN ON THE PLANS FOR DETERMINATION ON ACTION TO BE TAKING (I.E. REMOVAL, TRIMMING OR RELOCATION).
2. CLEARING AND GRUBBING SHALL NOT INCLUDE REMOVAL OR TRIMMING OF ELDERBERRY SHRUBS. THE TRIMMING, RELOCATION OR REMOVAL OF ELDERBERRY SHRUBS ARE REQUIRED TO BE PERFORMED BY A QUALIFIED CONTRACTOR WHO MUST SPECIALIZE IN ELDERBERRY REMOVAL, TRIMMING AND RELOCATIONS. ELDERBERRY SHURBS WILL NEED TO BE TRIMMED OR RELOCATED USING METHODOLOGY APPROVED BY CDFW, USFWS, AND THE YOLO HABITAT CONSERVANCY. ELDERBERRY CONTRACTORS QUALIFICATIONS ARE TO BE SUBMITTED TO THE CITY FOR APPROVAL.
3. ELDERBERRY SHRUBS WITHIN THE PROJECT AREA WILL BE PROTECTED IN PLACED UNLESS NOTED IN THE PLANS OTHERWISE. ELDERBERRY SHRUBS IDENTIFIED TO BE TRIMMED, REMOVED OR RELOCATED ARE TO BE PROTECTED IN PLACE DURING CONSTRUCTION UNTIL THE IDENTIFIED ACTION IS ABLE TO BE TAKEN BY A QUALIFIED ELDERBERRY CONTRACTOR.
4. ELDERBERRY SHRUB TRIMMING, RELOCATION OR REMOVAL SHALL ONLY BE DONE BETWEEN 11/01 THROUGH 02/15 WHICH IS THE DORMANCY PERIOD.

CONTRACT REPRESENTATIVES

ORGANIZATION/UTILITY	RESPONSIBLE ENTITY	REPRESENTATIVE	TELEPHONE	OTHER
UNDERGROUND ALERT	USA	---	800-227-2600	
FLOOD CONTROL / O&M	RD900	TBD	TBD	TBD
AGENCY (PROJECT MANAGER)	CITY OF WEST SACRAMENTO	JAIPAL CHAHAL	TBD	JAIPALC@CITYOFWESTSACRAMENTO.ORG FLOOD PROTECTION PLANNER CITY OF WEST SACRAMENTO 1110 WEST CAPITOL AVE.
AGENCY (PLANNING)	CITY OF WEST SACRAMENTO	PAUL DIRKSEN	916-617-4560	PAULD@CITYOFWESTSACRAMENTO.ORG FLOOD PROTECTION PLANNER CITY OF WEST SACRAMENTO 1110 WEST CAPITOL AVE.
AGENCY (PARKS)	CITY OF WEST SACRAMENTO	TBD	TBD	TBD
DESIGN ENGINEER CIVIL	HDR	VINSON RUSSO	916-817-4771	VINSON.RUSSO@HDRINC.COM SENIOR CIVIL ENGINEER 2365 IRON POINT ROAD, SUITE 300 FOLSOM CA 95630
DESIGN ENGINEER STRUCTURAL	HDR	ZHEN LI	TBD	ZHEN.LI@HDRINC.COM SENIOR BRIDGE ENGINEER 2365 IRON POINT ROAD, SUITE 300 FOLSOM CA 95630
GEOTECHNICAL ENGINEER	HDR	GARRETT HARRIS	TBD	GARRETT.HARRIS@HDRINC.COM SENIOR GEOTECHNICAL ENGINEER 2365 IRON POINT ROAD, SUITE 300 FOLSOM CA 95630
WATER QUALITY ENGINEER	INTRINSYX	GALEN O'TOOLE	TBD	GALEN@INTRINSYX.COM
ELECTRICITY	PG&E	JACK SPINELLA	530-433-3832	JACK.SPINELLA@PGE.COM NEW BUSINESS REPRESENTATIVE SACRAMENTO
SHERWOOD MARINA		TBD	TBD	TBD
SACRAMENTO YACHT CLUB		TBD	TBD	TBD

Issue No.	Description	Date	Drwn.	Chkd.	Resp. Engr.	Proj. Mgr.
–	–	–	–	–	–	–

HORIZONTAL DATUM IS THE CALIFORNIA COORDINATE SYSTEM, ZONE 2 (NAD 83)

VERTICAL DATUM IS NAVD 88

EL NAVD 88 =
EL NGVD 29+2.6'

HDR Engineering, Inc.

BAR LENGTH ON ORIGINAL DRAWING EQUALS ONE INCH. ADJUST SCALE ACCORDINGLY.

Project Manager: K. JAMESON
Designed: V. RUSSO
Designed: X
Checked: K. FELLOWS
Drawn: V. RUSSO

SACRAMENTO-SAN JOAQUIN DELTA CONSERVANCY
BEES LAKES HABITAT RESTORATION PROJECT

90% DESIGN

GENERAL NOTES AND CONTACT INFORMATION

Date	Project No.	Drawing No.	Issue
NOVEMBER, 2023	3223–10358905	G-03	X
Scale: NOT TO SCALE	File Name: G–03.DWG		

C:\PWWORKING\WESTO1\D2918499\G-03.DWG
November 20, 2023

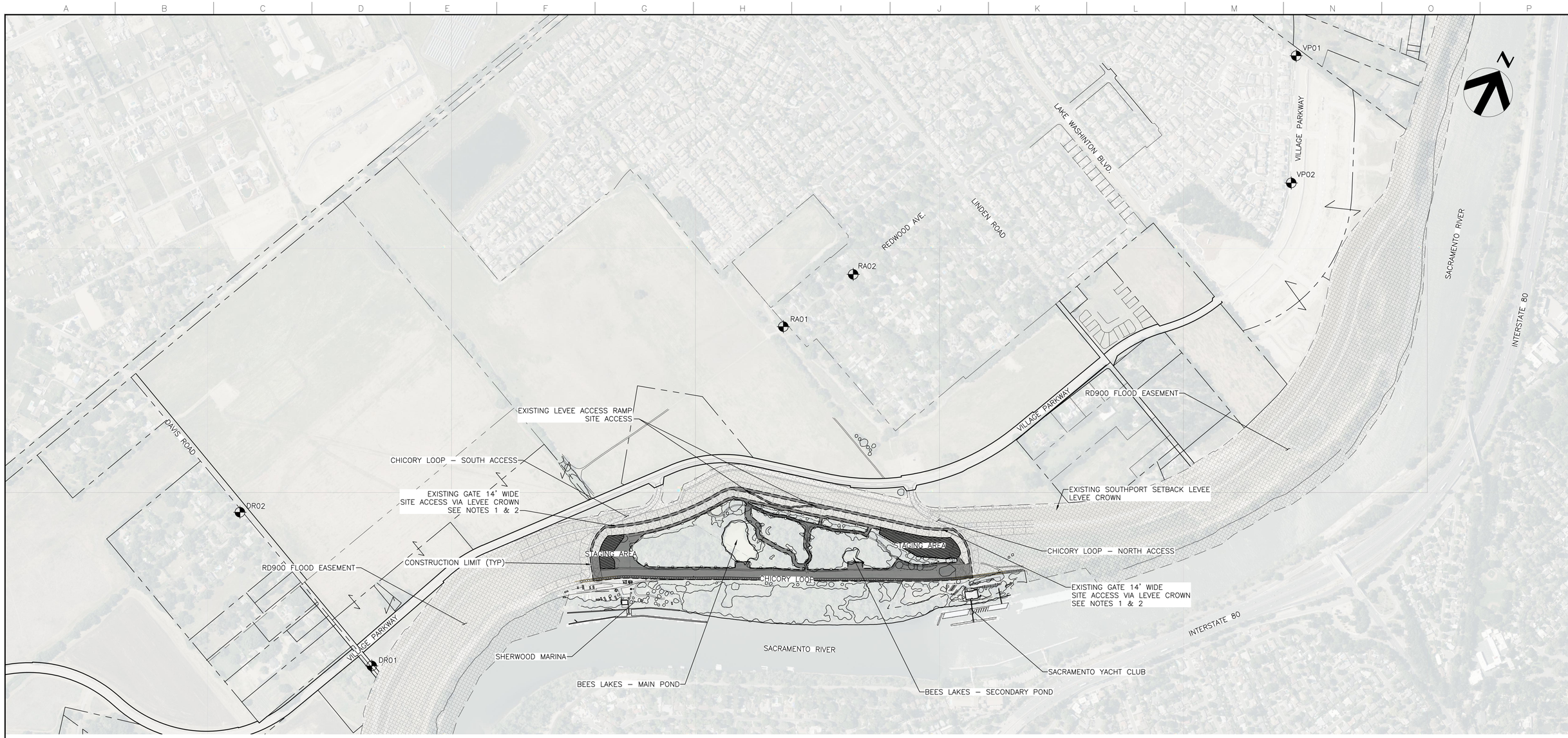

BEES LAKE

1" = 400'

PROJECT CONTROL MONUMENT COORDINATE TABLE				
NAD83 Zone 2 2011 ADJUSTMENT (Epoch 2010.0)/NAVD88 (US Survey Feet)				
POINT NO.	NORTHING	EASTING	ELEVATION	DESCRIPTION
DR01	1954736.862	6694925.014	17.924	2" ALUMINUM CAP MARKED WITH STATION NAME SET IN A 2" DIA CONCRETE COLLAR
DR02	1955353.317	6693384.431	15.184	2" ALUMINUM CAP MARKED WITH STATION NAME SET IN A 2" DIA CONCRETE COLLAR
RA01	1958763.511	6696629.677	14.976	2" ALUMINUM CAP MARKED WITH STATION NAME SET IN A 2" DIA CONCRETE COLLAR
RA02	1959408.482	6696938.918	14.042	2" ALUMINUM CAP MARKED WITH STATION NAME SET IN A 2" DIA CONCRETE COLLAR
VP01	1962677.567	6699329.857	16.797	2" ALUMINUM CAP MARKED WITH STATION NAME SET IN A 2" DIA CONCRETE COLLAR
VP02	1961734.338	6699775.940	15.979	2" ALUMINUM CAP MARKED WITH STATION NAME SET IN A 2" DIA CONCRETE COLLAR

PROJECT CONTROL INFORMATION PROVIDED FROM "WSAFAC SACRAMENTO RIVER SOUTH LEVEE SURVEY CONTROL PROJECT REPORT" BY MORROW SURVEYING INC. DATED MARCH 2014.

CONTRACTOR TO VERIFY CITY'S CONTROL PRIOR TO COMMENCING WORK.

NOTES:

1. ACCESS INTO THE BEES LAKES PROJECT AREA WILL BE BY THE EXISTING LEVEE CROWN PATROL ROAD. GATE ACCESS MUST BE COORDINATED WITH RD900 AND WSAFCA.
2. EQUIPMENT REQUIRING TRAILER TRANSPORTATION MAY REQUIRE RIGHT TURN IN AND RIGHT TURN OUT ONTO AND OFF OF THE CROWN ROAD BECAUSE OF THE ARTICULATION REQUIRED TO MAKE LEFT TURN TRANSITIONS.
3. ACCESS TO THE SHERWOOD AND YACHT CLUB MARINA'S MUST BE MAINTAINED THROUGHOUT CONSTRUCTION.
4. STREET CLEANING MUST BE DONE DAILY.
5. ANY DAMAGE TO THE LEVEE CROWN PATROL ROAD, GATES OR POST AND CABLE FENCE AS A RESULT OF CONSTRUCTION ACTIVITIES MUST BE REPAIRED OR REPLACED TO PRE CONSTRUCTION CONDITION OR BETTER AT NO COST TO THE OWNER.

90% DESIGN

Issue No.	Description	Date	Drwn.	Chkd.	Resp. Engr.	Proj. Mgr.

HORIZONTAL DATUM IS THE CALIFORNIA COORDINATE SYSTEM, ZONE 2 (NAD 83)

VERTICAL DATUM IS NAVD 88

EL NAVD 88 =
EL NGVD 29+2.6'

HDR Engineering, Inc.

BAR LENGTH ON ORIGINAL DRAWING EQUALS ONE INCH. ADJUST SCALE ACCORDINGLY.

Project Manager: K. JAMESON
Designed: V. RUSSO
Designed: X
Checked: K. FELLOWS
Drawn: V. RUSSO

SACRAMENTO-SAN JOAQUIN DELTA CONSERVANCY
BEES LAKES HABITAT RESTORATION PROJECT

PROJECT SURVEY CONTROL INFORMATION

Date	Project No.	Drawing No.	Issue
NOVEMBER, 2023	3223-10358905	G-04	X
Scale: 1" = 400'	File Name: G-04.DWG		

C:\PWWORKING\WEST01\D2918499\G-04.DWG
November 21, 2023

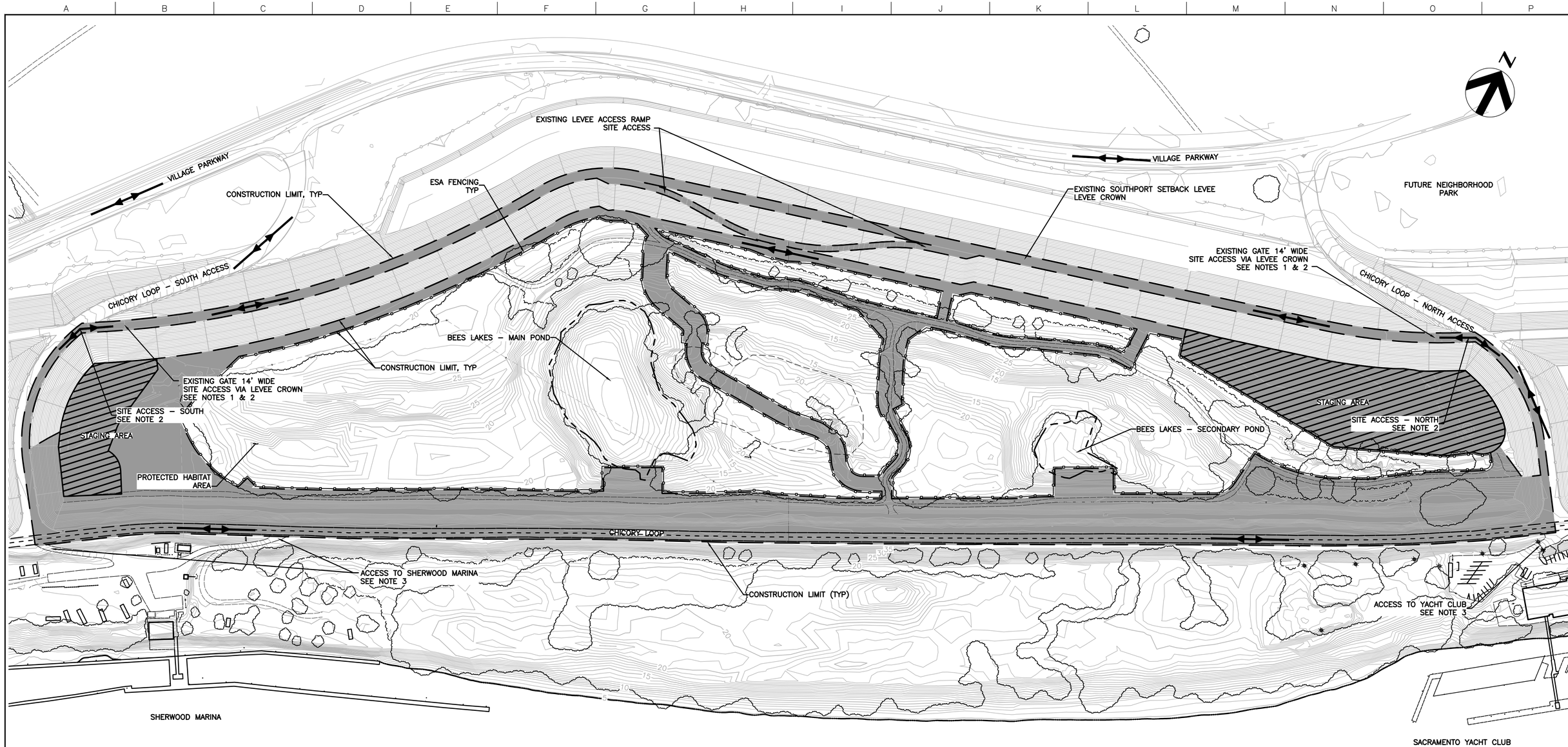

BEES LAKE – SITE PLAN

1" = 100'

NOTES:

1. ACCESS INTO THE BEES LAKES PROJECT AREA WILL BE BY THE EXISTING LEVEE CROWN PATROL ROAD. GATE ACCESS MUST BE COORDINATED WITH RD900 AND WSAFCA.
2. EQUIPMENT REQUIRING TRAILER TRANSPORTATION MAY REQUIRE RIGHT TURN IN WHEN ENTERING FROM THE SOUTH AND LEFT TURN IN WHEN ENTERING FROM THE NORTH ONTO TO THE CROWN ROAD BECAUSE OF THE ARTICULATION REQUIRED TO MAKE THE TURN.
3. ACCESS TO THE SHERWOOD AND YACHT CLUB MARINA'S MUST BE MAINTAINED THROUGHOUT CONSTRUCTION.
4. STREET CLEANING MUST BE DONE DAILY.
5. ANY DAMAGE TO THE LEVEE CROWN PATROL ROAD, GATES OR POST AND CABLE FENCE AS A RESULT OF CONSTRUCTION ACTIVITIES MUST BE REPAIRED OR REPLACED TO PRE CONSTRUCTION CONDITION OR BETTER AT NO COST TO THE OWNER.

90% DESIGN

Issue No.	Description	Date	Drwn.	Chkd.	Resp. Engr.	Proj. Mgr.

HORIZONTAL DATUM IS THE CALIFORNIA COORDINATE SYSTEM, ZONE 2 (NAD 83)

VERTICAL DATUM IS NAVD 88

EL NAVD 88 =
EL NGVD 29+2.6'

HDR Engineering, Inc.

BAR LENGTH ON ORIGINAL DRAWING EQUALS ONE INCH. ADJUST SCALE ACCORDINGLY.

Project Manager: K. JAMESON
Designed: V. RUSSO
Designed: X
Checked: K. FELLOWS
Drawn: V. RUSSO

SACRAMENTO-SAN JOAQUIN DELTA CONSERVANCY
BEES LAKES HABITAT RESTORATION PROJECT

BEES LAKES STAGING AREAS

Date	Project No.	Drawing No.	Issue
NOVEMBER, 2023	3223–10358905	G-10	X
Scale: 1" = 100'	File Name: G–10.DWG		

C:\PWWORKING\WEST01\D2918499\G–10.DWG
October 9, 2023

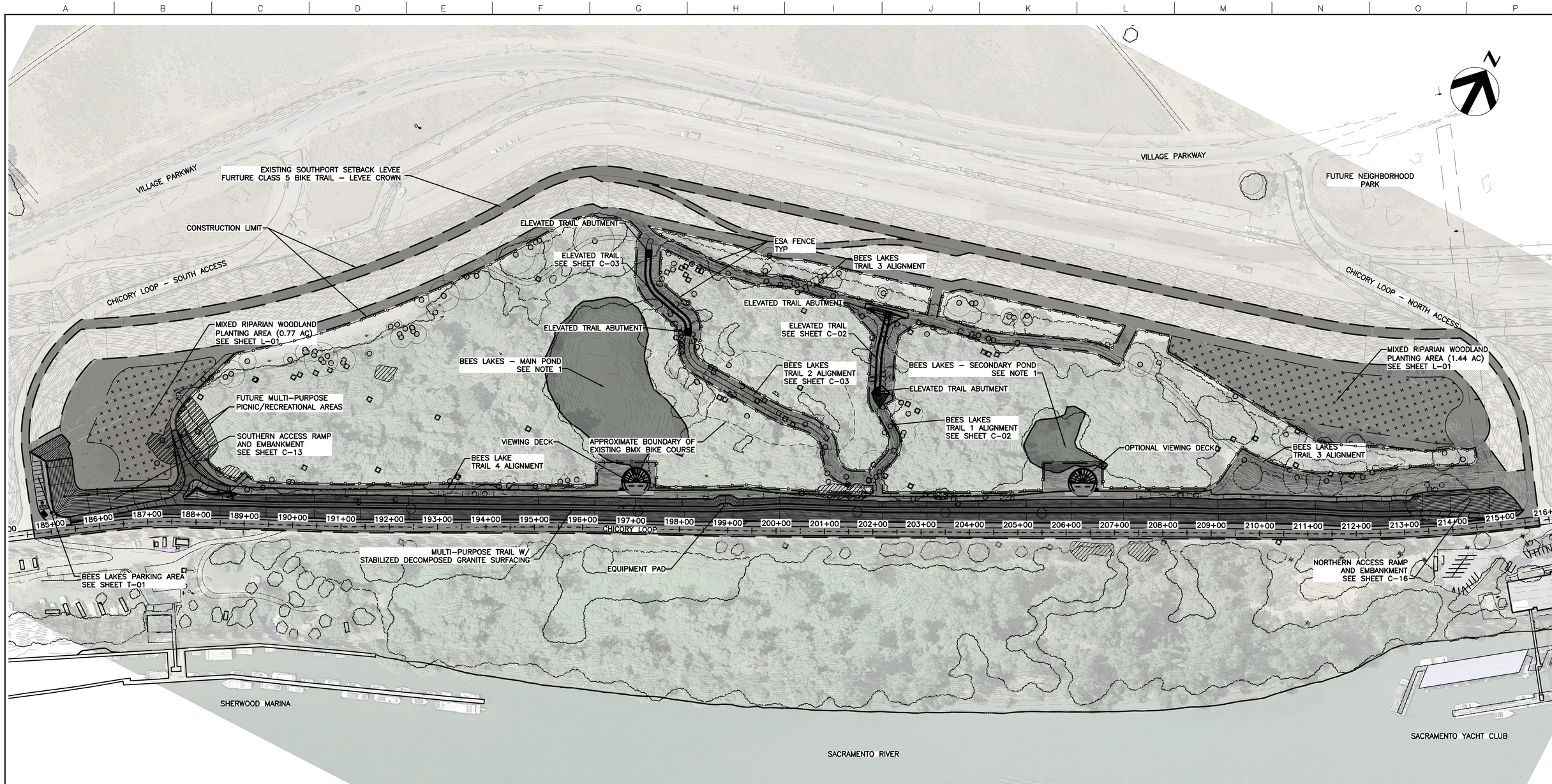

BEES LAKE – SITE PLAN

SCALE 1" = 100'

NOTES:

1. FOR THE BEES LAKE PROJECT AREA SELECTIVE REMOVAL OF WOODY INVASIVE PLANTS, THE REMOVAL OF UNWANTED TRASH AND DEBRIS, POND WATER QUALITY IMPROVEMENTS AND WETLAND ENHANCEMENTS INCLUDING THE PLANTING ALONG THE PONDS EDGES AND THE INSTALLATION OF FLOATING ISLANDS WILL BE PERFORMED AS PART OF THE SITE RESTORATION WORK. SEE LANDSCAPING SERIES SHEETS FOR PLANTING PALLETS AND DETAILS.

90% DESIGN

Issue No.	Description	Date	Drwn.	Chkd.	Resp. Engr.	Proj. Mgr.

HORIZONTAL DATUM IS THE CALIFORNIA COORDINATE SYSTEM, ZONE 2 (NAD 83)

VERTICAL DATUM IS NAVD 88

EL NAVD 88 =
EL NGVD 29+2.6'

HDR Engineering, Inc.

BAR LENGTH ON ORIGINAL DRAWING EQUALS ONE INCH. ADJUST SCALE ACCORDINGLY.

Project Manager: K. JAMESON
Designed: V. RUSSO
Designed: X
Checked: K. FELLOWS
Drawn: V. RUSSO

SACRAMENTO-SAN JOAQUIN DELTA CONSERVANCY
BEES LAKES HABITAT RESTORATION PROJECT

BEES LAKE SITE PLAN

Date	Project No.	Drawing No.	Issue
NOVEMBER, 2023	3223-10358905	C-01	X
Scale: 1" = 100'	File Name: C-01.DWG		

C:\PWWORKING\WEST01\D2918499\C-01.DWG
November 20, 2023

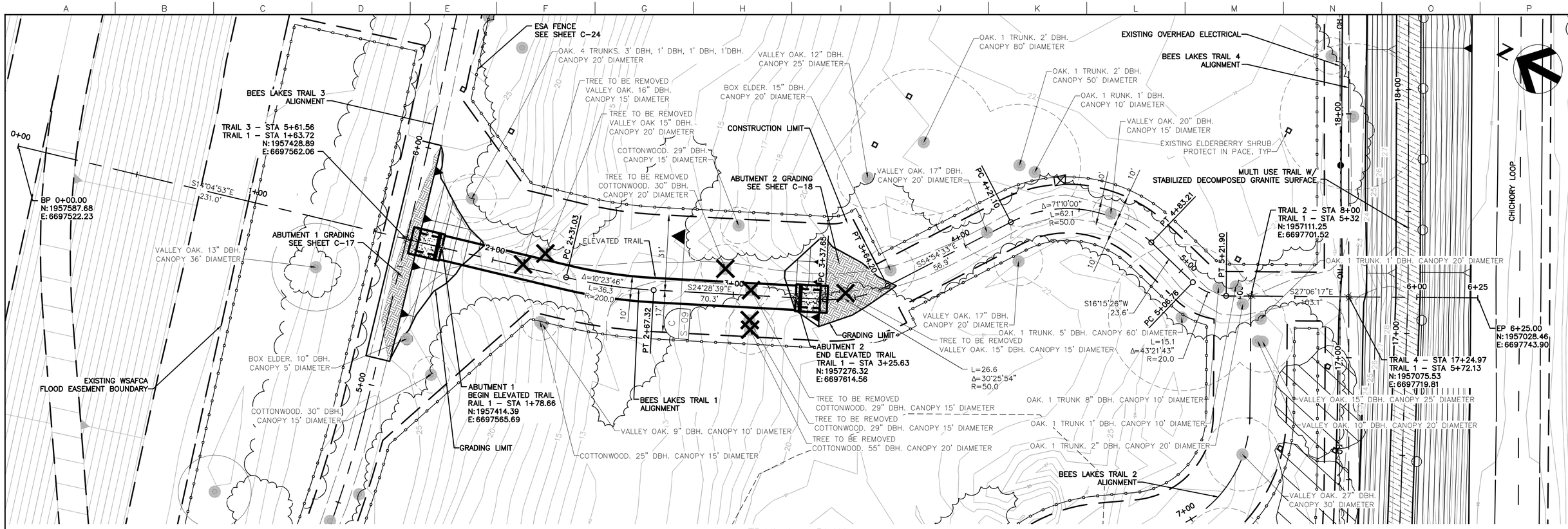

TRAIL 1 – PLAN

SCALE: 1" = 20'

NOTES:

1. CLEAR AND GRUB WITHIN THE CONSTRUCTION LIMIT OF THE ELEVATED TRAIL AND REMOVE EXISTING TREES IDENTIFIED TO BE REMOVED WITHIN PROPOSED TRAIL AND ELEVATED TRAIL ALIGNMENT. TRIM BRANCHES OF TRESS THAT ARE TO REMAIN AS NEEDED TO ALLOW FOR CONSTRUCTION OF THE BOARDWALK. UNLESS NOTED OTHERWISE ELDERBERRY SHRUBS ARE TO BE PROTECTED IN PLACE.
2. SEE SHEET C-24 FOR TREE STUMP REMOVAL DETAILS.
3. ELDERBERRY SHRUB TRIMMING OR RELOCATION TO BE DONE BY AN APPROVED QUALIFIED CONTRACTOR. SEE ELDERBERRY NOTES ON SHEET G-03.
4. SEE STRUCTURAL SERIES SHEETS FOR ABUTMENT AND PILE LAYOUT AND DESIGNS

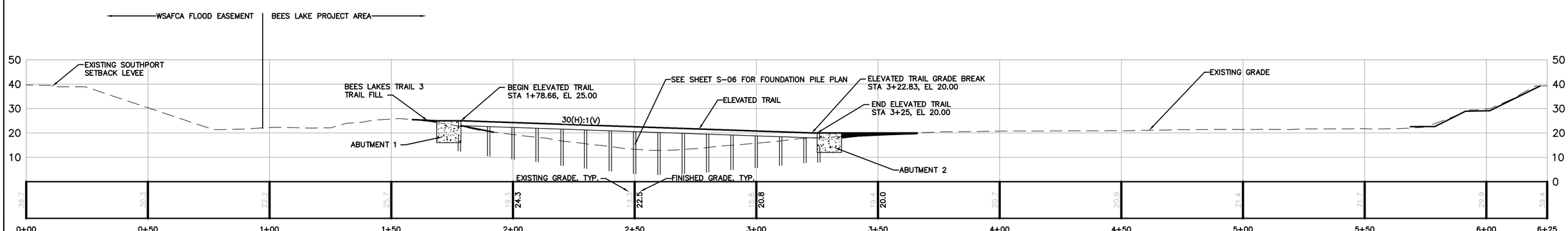

TRAIL 1 – PROFILE

SCALE: 1" = 20'

90% DESIGN

Issue No.	Description	Date	Drwn.	Chkd.	Resp. Engr.	Proj. Mgr.

HORIZONTAL DATUM IS THE CALIFORNIA COORDINATE SYSTEM, ZONE 2 (NAD 83)

VERTICAL DATUM IS NAVD 88

EL NAVD 88 =
EL NGVD 29+2.6'

HDR Engineering, Inc.

BAR LENGTH ON ORIGINAL DRAWING EQUALS ONE INCH. ADJUST SCALE ACCORDINGLY.

Project Manager: K. JAMESON
Designed: V. RUSSO
Designed: X
Checked: K. FELLOWS
Drawn: V. RUSSO

SACRAMENTO-SAN JOAQUIN DELTA CONSERVANCY
BEES LAKES HABITAT RESTORATION PROJECT

BEES LAKES TRAIL 1
PLAN AND PROFILE

Date	Project No.	Drawing No.	Issue
NOVEMBER, 2023	3223-10358905	C-02	X
Scale: 1" = 20'	File Name: C-02.DWG		

C:\PWWORKING\WEST01\D2918499\C-02.DWG
November 20, 2023

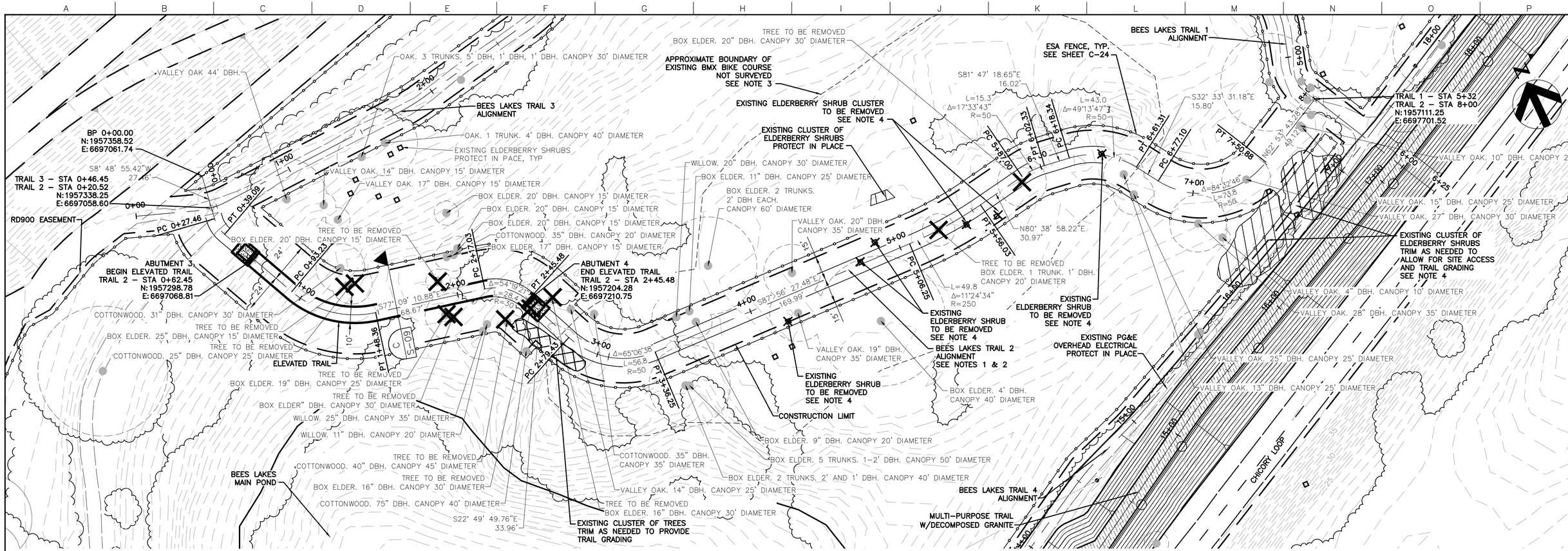

TRAIL 2 – PLAN

1"=30'

NOTES:

1. BEES LAKES TRAIL 2 ALIGNMENT RUNS THROUGH AN EXISTING BMX BIKE COURSE EXCAVATED INTO THE EXISTING GRADE. SURVEY TOPOGRAPHY FOR THIS AREA DOES NOT REFLECT THE EXISTING GRADE FOR THIS AREA AS A RESULT. THE ALIGNMENT PROVIDED IS APPROXIMATE AND THE CONTRACTOR MUST PROVIDED A FIELD DESIGN FOR GRADING A FOOT TRAIL 10–FEET IN WIDTH FROM ABUTMENT 4 TO STATION 6+40±. PROPOSED GRADING MUST BE SUBMITTED FOR AGENCY REVIEW AND APPROVAL. GRADING PLAN SHOULD MINIMIZE TREE AND ELDERBERRY SHRUB REMOVAL.
2. CLEAR AND GRUB WITHIN THE CONSTRUCTION LIMIT OF THE ELEVATED TRAIL AND REMOVE EXISTING TREES IDENTIFIED TO BE REMOVED WITHIN PROPOSED TRAIL AND ELEVATED TRAIL ALIGNMENT. TRIM BRANCHES OF TRESS THAT ARE TO REMAIN AS NEEDED TO ALLOW FOR CONSTRUCTION OF THE BOARDWALK. UNLESS NOTED OTHERWISE ELDERBERRY SHRUBS ARE TO BE PROTECTED IN PLACE.
3. SEE SHEET C–24 FOR TREE STUMP REMOVAL DETAILS.
4. ELDERBERRY SHRUB TRIMMING OR RELOCATION TO BE DONE BY AN APPROVED QUALIFIED CONTRACTOR. SEE ELDERBERRY NOTES ON SHEET G–03.
5. SEE STRUCTURAL SERIES SHEETS FOR ABUTMENT AND PILE LAYOUT AND DESIGNS

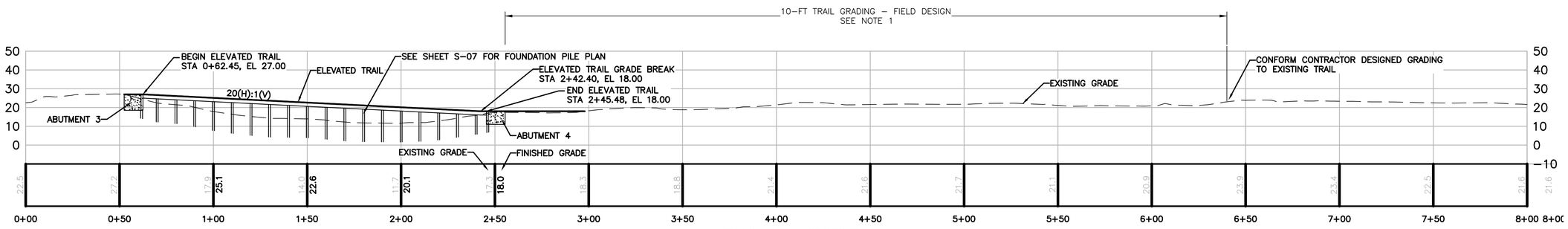

TRAIL 2 – PROFILE

NTS

90% DESIGN

Issue No.	Description	Date	Drwn.	Chkd.	Resp. Engr.	Proj. Mgr.

HORIZONTAL DATUM IS THE CALIFORNIA COORDINATE SYSTEM, ZONE 2 (NAD 83)

VERTICAL DATUM IS NAVD 88

EL NAVD 88 = EL NGVD 29+2.6'

HDR Engineering, Inc.

BAR LENGTH ON ORIGINAL DRAWING EQUALS ONE INCH. ADJUST SCALE ACCORDINGLY.

Project Manager: K. JAMESON
Designed: V. RUSSO
Designed: X
Checked: K. FELLOWS
Drawn: V. RUSSO

SACRAMENTO-SAN JOAQUIN DELTA CONSERVANCY
BEES LAKES HABITAT RESTORATION PROJECT

BEES LAKES TRAIL 2 PLAN AND PROFILE

Date	Project No.	Drawing No.	Issue
NOVEMBER, 2023	3223–10358905	C-03	X
Scale: 1" = 30'	File Name: C–03.DWG		

C:\PWWORKING\WEST01\D2918499\C-03.DWG
November 20, 2023

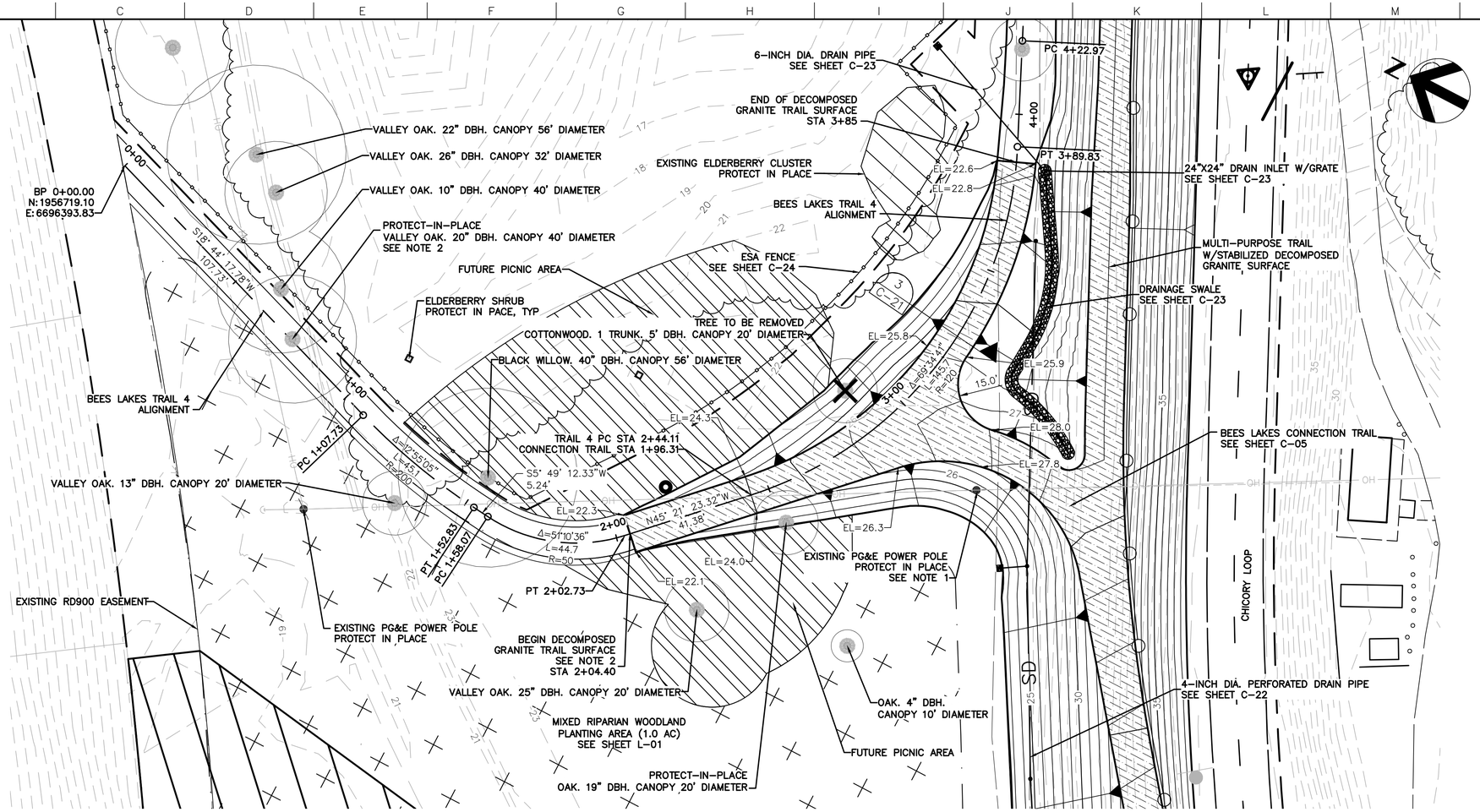

MULTIPURPOSE TO TRAIL 4 CONNECTION – PLAN

SCALE: 1"=20'

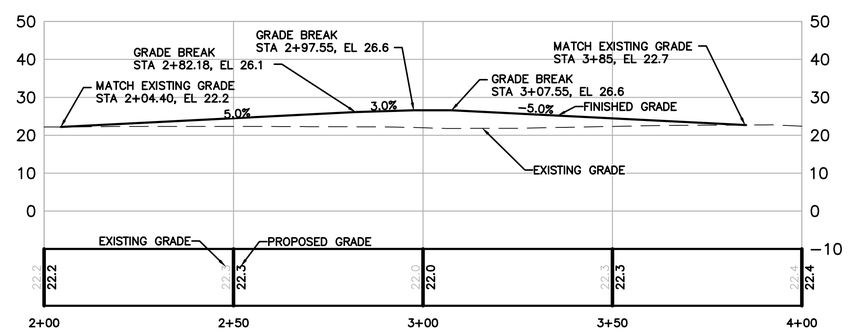

TRAIL 4 – PROFILE

NTS

NOTES:

1. EXISTING PG&E POWER POLES TO REMAIN IN PLACE. A PERMIT WITH PG&E WILL BE NEEDED TO PLACE FILL AROUND THE EXISTING POLES. COORDINATE WITH PG&E TO HOLD POLES DURING FILL PLACEMENT WITHIN 10 FEET OF THE POLE. HAND COMPACTION EQUIPMENT MUST BE USED WITHIN 5 FEET OF THE POLES.
2. NO GRADING REQUIRED BETWEEN STATION 0+00 AND STATION 2+04.40±
3. CLEAR AND GRUB WITHIN THE CONSTRUCTION LIMIT AND REMOVE EXISTING TREES IDENTIFIED TO BE REMOVED WITHIN PROPOSED TRAIL ALIGNMENT. TRIM BRANCHES OF TRESS THAT ARE TO REMAIN AS NEEDED TO ALLOW FOR CONSTRUCTION. UNLESS NOTED OTHERWISE ELDERBERRY SHRUBS ARE TO BE PROTECTED IN PLACE.
4. SEE SHEET C-24 FOR TREE STUMP REMOVAL DETAILS.
5. ELDERBERRY SHRUB TRIMMING OR RELOCATION TO BE DONE BY AN APPROVED QUALIFIED CONTRACTOR. SEE ELDERBERRY NOTES ON SHEET G-03.

C:\PWWORKING\WEST01\D2918499\C-04.DWG
November 20, 2023

Issue No.	Description	Date	Drwn.	Chkd.	Resp. Engr.	Proj. Mgr.

HORIZONTAL DATUM IS THE CALIFORNIA COORDINATE SYSTEM, ZONE 2 (NAD 83)

VERTICAL DATUM IS NAVD 88

EL NAVD 88 =
EL NGVD 29+2.6'

HDR Engineering, Inc.

BAR LENGTH ON ORIGINAL DRAWING EQUALS ONE INCH. ADJUST SCALE ACCORDINGLY.

Project Manager: K. JAMESON
Designed: V. RUSSO
Designed: X
Checked: K. FELLOWS
Drawn: V. RUSSO

SACRAMENTO-SAN JOAQUIN DELTA CONSERVANCY
BEES LAKES HABITAT RESTORATION PROJECT

90% DESIGN

TRAIL 4 CONFORM

PLAN AND PROFILE

Date	Project No.	Drawing No.	Issue
NOVEMBER, 2023	3223-10358905	C-04	X
Scale: 1" = 20'	File Name: C-04.DWG		

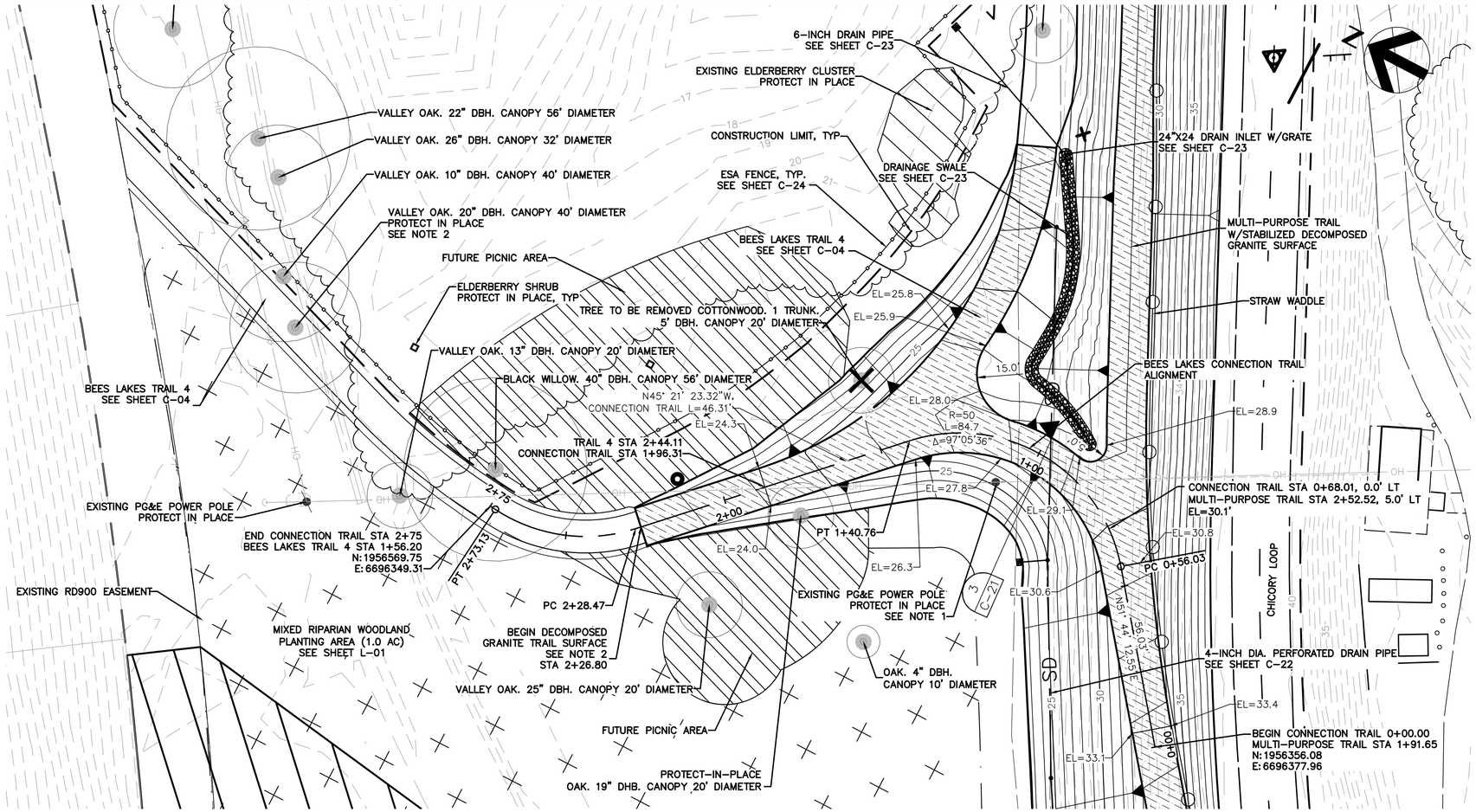

MULTI-PURPOSE TRAIL TO TRAIL 4 CONNECTION TRAIL – PLAN

SCALE: 1"=20'

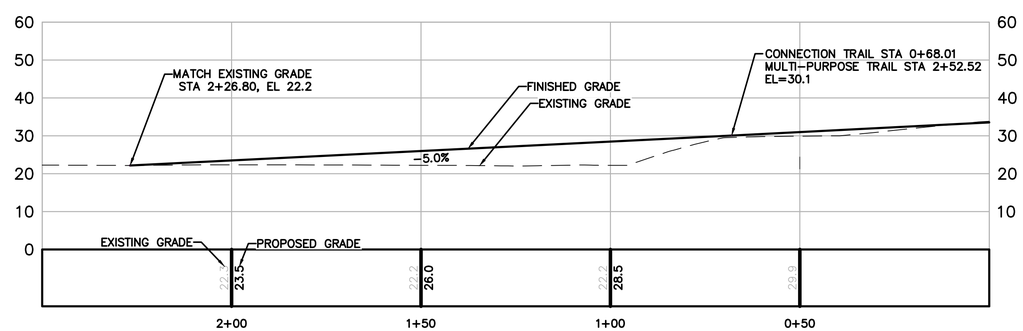

CONNECTION TRAIL – PROFILE

NTS

NOTES:

1. EXISTING PG&E POWER POLES TO REMAIN IN PLACE. A PERMIT WITH PG&E WILL BE NEEDED TO PLACE FILL AROUND THE EXISTING POLES. COORDINATE WITH PG&E TO HOLD POLES DURING FILL PLACEMENT WITHIN 10 FEET OF THE POLE. HAND COMPACTION EQUIPMENT MUST BE USED WITHIN 5 FEET OF THE POLES.
2. NO GRADING REQUIRED BETWEEN STATION 0+00 AND STATION 2+04.40±
3. CLEAR AND GRUB WITHIN THE CONSTRUCTION LIMIT AND REMOVE EXISTING TREES IDENTIFIED TO BE REMOVED WITHIN PROPOSED TRAIL ALIGNMENT. TRIM BRANCHES OF TRESS THAT ARE TO REMAIN AS NEEDED TO ALLOW FOR CONSTRUCTION. UNLESS NOTED OTHERWISE ELDERBERRY SHRUBS ARE TO BE PROTECTED IN PLACE.
4. SEE SHEET C-24 FOR TREE STUMP REMOVAL DETAILS.
5. ELDERBERRY SHRUB TRIMMING OR RELOCATION TO BE DONE BY AN APPROVED QUALIFIED CONTRACTOR. SEE ELDERBERRY NOTES ON SHEET G-03.

90% DESIGN

Issue No.	Description	Date	Drwn.	Chkd.	Resp. Engr.	Proj. Mgr.

HORIZONTAL DATUM IS THE CALIFORNIA COORDINATE SYSTEM, ZONE 2 (NAD 83)

VERTICAL DATUM IS NAVD 88

EL NAVD 88 =
EL NGVD 29+2.6'

HDR Engineering, Inc.

BAR LENGTH ON ORIGINAL DRAWING EQUALS ONE INCH. ADJUST SCALE ACCORDINGLY.

Project Manager: K. JAMESON
Designed: V. RUSSO
Designed: X
Checked: K. FELLOWS
Drawn: V. RUSSO

SACRAMENTO-SAN JOAQUIN DELTA CONSERVANCY
BEES LAKES HABITAT RESTORATION PROJECT

MULTI-PURPOSE TRAIL TO TRAIL 4 CONNECTION TRAIL PLAN AND PROFILE

Date	Project No.	Drawing No.	Issue
NOVEMBER, 2023	3223-10358905	C-05	X
Scale: 1" = 20'	File Name: C-05.DWG		

C:\PWWORKING\WEST01\D2918499\C-05.DWG
November 20, 2023

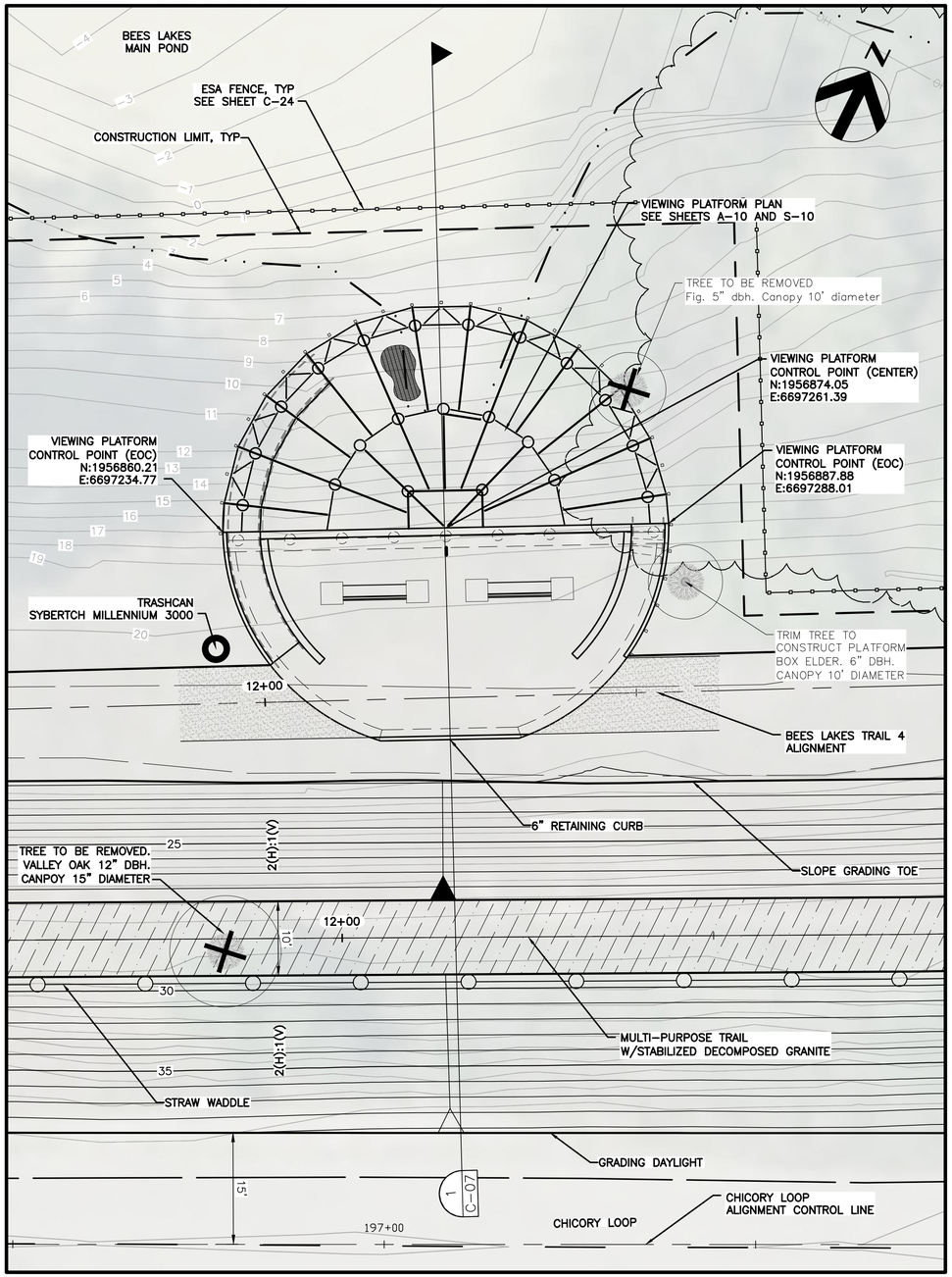

PRIMARY POND
VIEWING PLATFORM – PLAN

SCALE: 1" = 10'

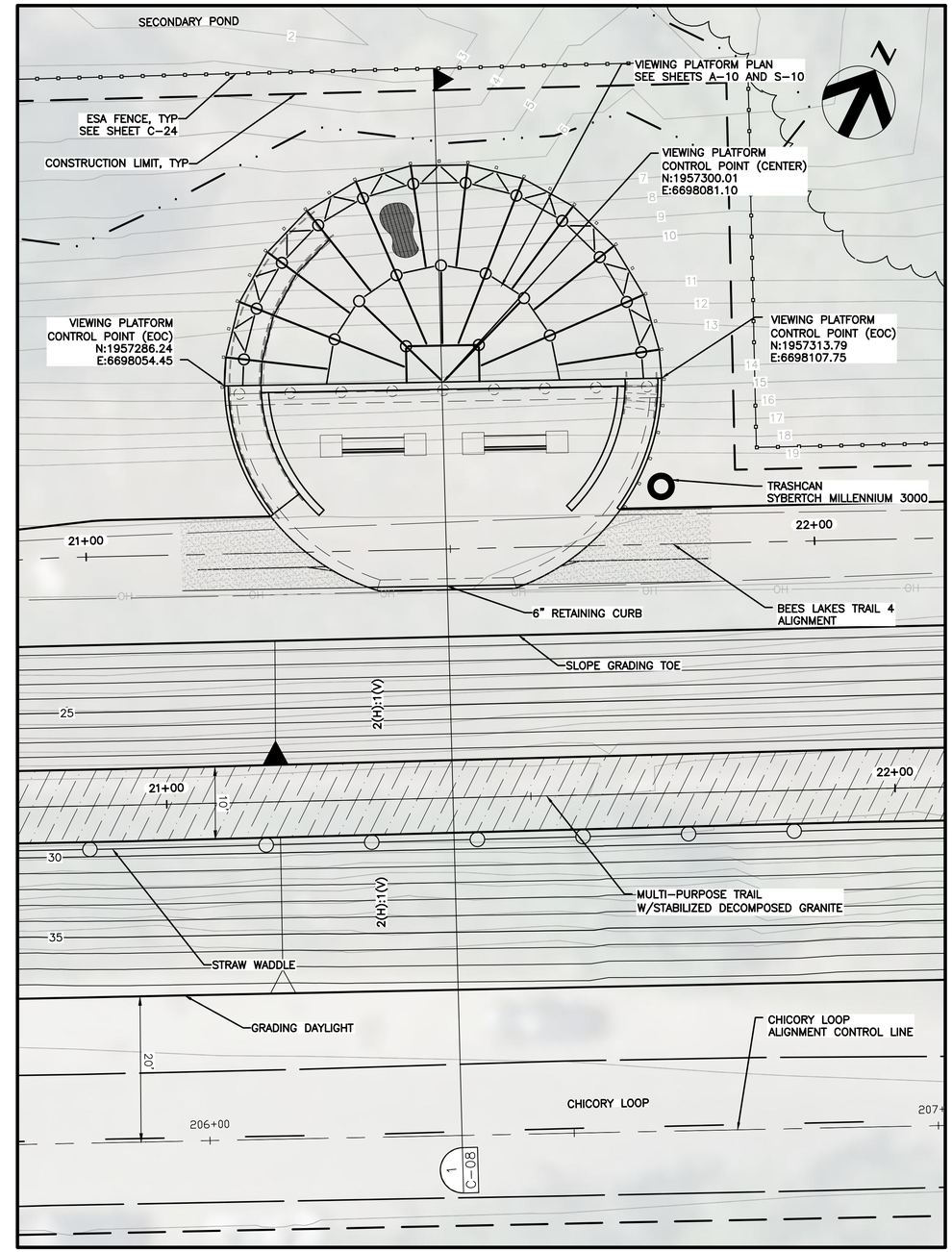

SECONDARY POND
VIEWING PLATFORM – PLAN

SCALE: 1" = 10'

NOTES:

1. CLEAR AND GRUB WITHIN THE CONSTRUCTION LIMIT AND REMOVE EXISTING TREES IDENTIFIED TO BE REMOVED WITHIN PROPOSED TRAIL ALIGNMENTS. TRIM BRANCHES OF TRESS THAT ARE TO REMAIN AS NEEDED TO ALLOW FOR CONSTRUCTION. UNLESS NOTED OTHERWISE ELDERBERRY SHRUBS ARE TO BE PROTECTED IN PLACE.
2. SEE SHEET C-24 FOR TREE STUMP REMOVAL DETAILS.
3. ELDERBERRY SHRUB TRIMMING OR RELOCATION TO BE DONE BY AN APPROVED QUALIFIED CONTRACTOR. SEE ELDERBERRY NOTES ON SHEET G-03.
4. SEE STRUCTURAL SERIES SHEETS FOR VIEWING PLATFORM PLAN AND SECTIONS.
5. WATER LEVEL WITHIN THE BEES LAKES, PRIMARY AND SECONDARY PONDS, IS HYDRAULICALLY CONNECTED TO THE SACRAMENTO RIVER. DEPENDING UPON THE WATER LEVEL OF THE PONDS DURING CONSTRUCTION DEWATERING MAY BE REQUIRED TO CONSTRUCT SOME OR ALL OF THE CIDHP.

Issue No.	Description	Date	Drwn.	Chkd.	Resp. Engr.	Proj. Mgr.

HORIZONTAL DATUM IS THE CALIFORNIA COORDINATE SYSTEM, ZONE 2 (NAD 83)

VERTICAL DATUM IS NAVD 88

EL NAVD 88 =
EL NGVD 29+2.6'

HDR Engineering, Inc.

BAR LENGTH ON ORIGINAL DRAWING EQUALS ONE INCH. ADJUST SCALE ACCORDINGLY.

Project Manager	K. JAMESON
Designed	V. RUSSO
Designed	X
Checked	K. FELLOWS
Drawn	V. RUSSO

SACRAMENTO-SAN JOAQUIN DELTA CONSERVANCY
BEES LAKES HABITAT RESTORATION PROJECT

90% DESIGN

**BEES LAKES VIEWING PLATFORMS
PRIMARY AND SECONDARY PONDS
CIVIL SITE PLANS**

Date	Project No.	Drawing No.	Issue
NOVEMBER, 2023	3223-10358905	C-06	X
Scale: AS NOTED	File Name: C-06.DWG		

C:\PWWORKING\WEST01\D2918499\C-06.DWG
November 20, 2023

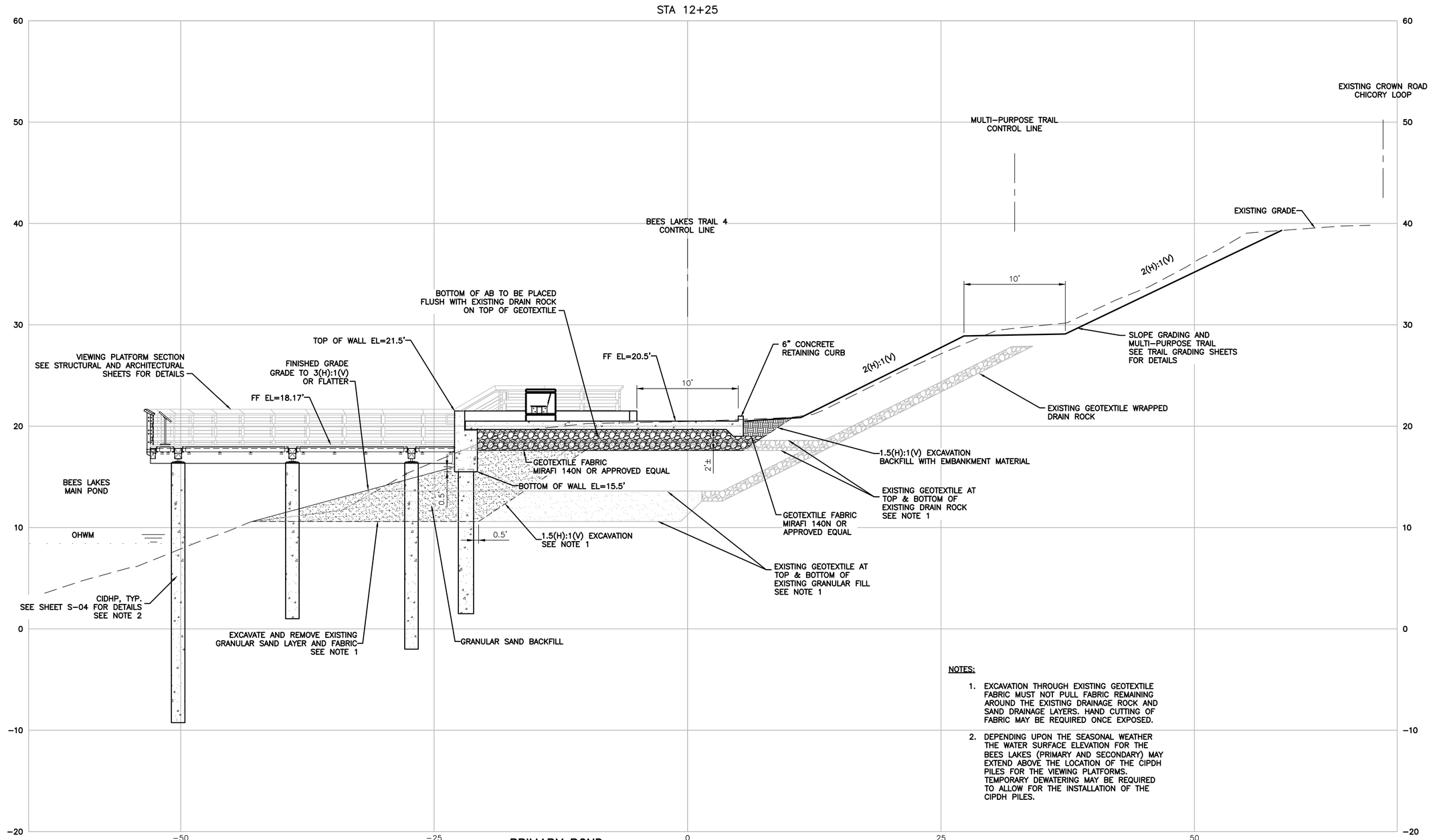

NOTES:

1. EXCAVATION THROUGH EXISTING GEOTEXTILE FABRIC MUST NOT PULL FABRIC REMAINING AROUND THE EXISTING DRAINAGE ROCK AND SAND DRAINAGE LAYERS. HAND CUTTING OF FABRIC MAY BE REQUIRED ONCE EXPOSED.
2. DEPENDING UPON THE SEASONAL WEATHER THE WATER SURFACE ELEVATION FOR THE BEES LAKES (PRIMARY AND SECONDARY) MAY EXTEND ABOVE THE LOCATION OF THE CIPDH PILES FOR THE VIEWING PLATFORMS. TEMPORARY DEWATERING MAY BE REQUIRED TO ALLOW FOR THE INSTALLATION OF THE CIPDH PILES.

PRIMARY POND VIEWING PLATFORM – SECTION

1 / –

SCALE: 1" = 5'

C:\PWWORKING\WEST01\D2918499\C-07.DWG
November 20, 2023

Issue No.	Description	Date	Drwn.	Chkd.	Resp. Engr.	Proj. Mgr.

HORIZONTAL DATUM IS THE CALIFORNIA COORDINATE SYSTEM, ZONE 2 (NAD 83)

VERTICAL DATUM IS NAVD 88

EL NAVD 88 =
EL NGVD 29+2.6'

HDR Engineering, Inc.

BAR LENGTH ON ORIGINAL DRAWING EQUALS ONE INCH. ADJUST SCALE ACCORDINGLY.

Project Manager: K. JAMESON
Designed: V. RUSSO
Designed: X
Checked: K. FELLOWS
Drawn: V. RUSSO

SACRAMENTO-SAN JOAQUIN DELTA CONSERVANCY
BEES LAKES HABITAT RESTORATION PROJECT

90% DESIGN

BEES LAKES PRIMARY POND VIEWING PLATFORM CIVIL SECTION

Date	Project No.	Drawing No.	Issue
NOVEMBER, 2023	3223-10358905	C-07	X
Scale: AS NOTED	File Name: C-07.DWG		

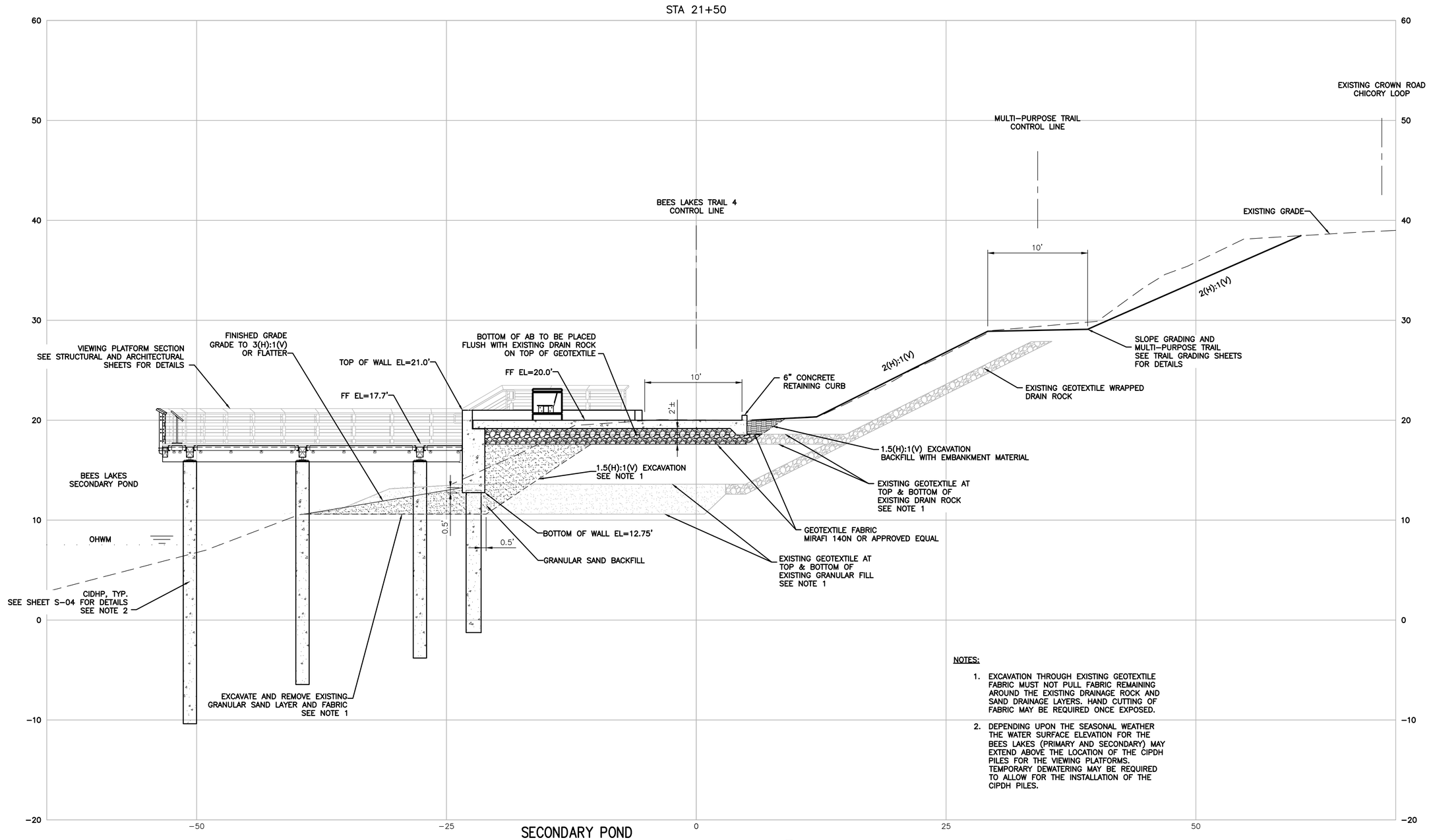

NOTES:

1. EXCAVATION THROUGH EXISTING GEOTEXTILE FABRIC MUST NOT PULL FABRIC REMAINING AROUND THE EXISTING DRAINAGE ROCK AND SAND DRAINAGE LAYERS. HAND CUTTING OF FABRIC MAY BE REQUIRED ONCE EXPOSED.
2. DEPENDING UPON THE SEASONAL WEATHER THE WATER SURFACE ELEVATION FOR THE BEES LAKES (PRIMARY AND SECONDARY) MAY EXTEND ABOVE THE LOCATION OF THE CIPDH PILES FOR THE VIEWING PLATFORMS. TEMPORARY DEWATERING MAY BE REQUIRED TO ALLOW FOR THE INSTALLATION OF THE CIPDH PILES.

SECONDARY POND VIEWING PLATFORM – SECTION

1 / –

SCALE: 1" = 5'

C:\PWWORKING\WEST01\D2918499\C–08.DWG
November 20, 2023

Issue No.	Description	Date	Drwn.	Chkd.	Resp. Engr.	Proj. Mgr.

HORIZONTAL DATUM IS THE CALIFORNIA COORDINATE SYSTEM, ZONE 2 (NAD 83)

VERTICAL DATUM IS NAVD 88

EL NAVD 88 =
EL NGVD 29+2.6'

HDR Engineering, Inc.

BAR LENGTH ON ORIGINAL DRAWING EQUALS ONE INCH. ADJUST SCALE ACCORDINGLY.

Project Manager: K. JAMESON
Designed: V. RUSSO
Designed: X
Checked: K. FELLOWS
Drawn: V. RUSSO

SACRAMENTO-SAN JOAQUIN DELTA CONSERVANCY
BEES LAKES HABITAT RESTORATION PROJECT

90% DESIGN

BEES LAKES SECONDARY POND VIEWING PLATFORM CIVIL SECTION

Date	Project No.	Drawing No.	Issue
NOVEMBER, 2023	3223–10358905	C-08	X
Scale: AS NOTED	File Name: C–08.DWG		

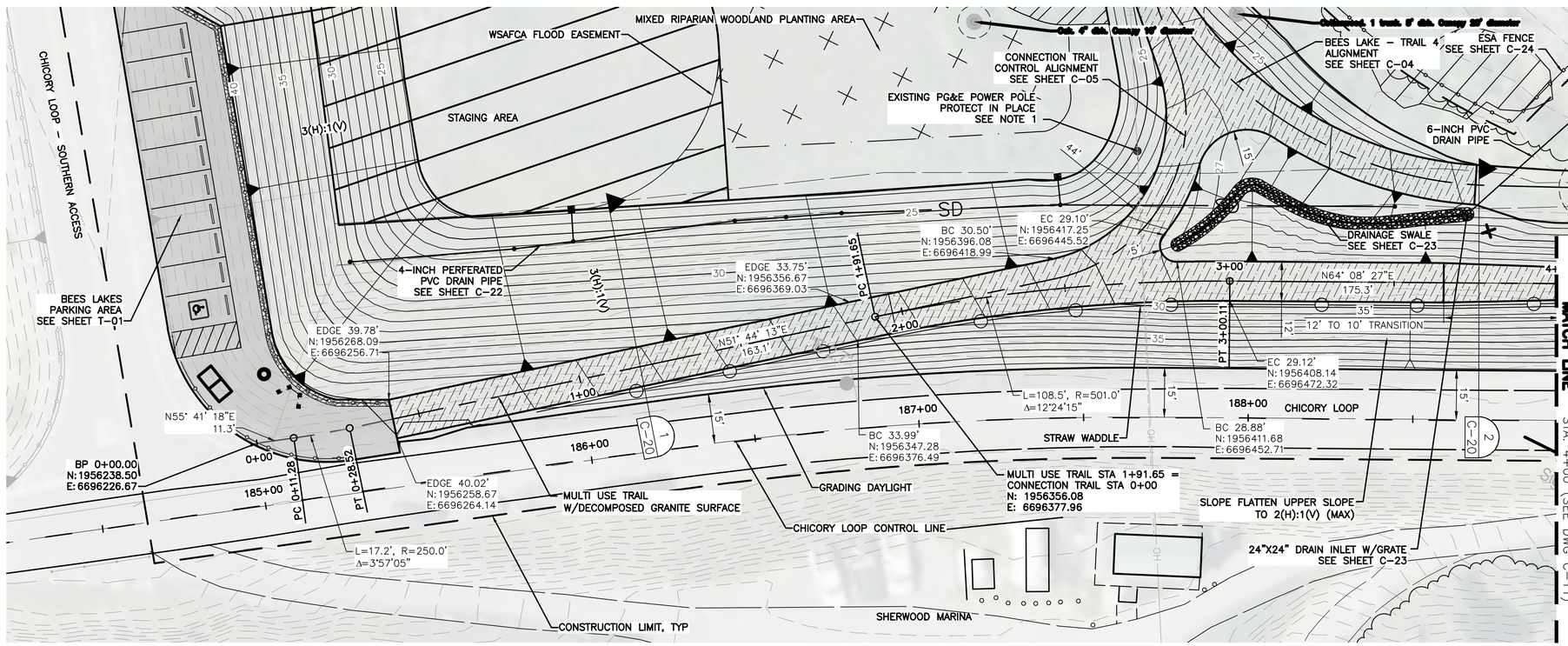

BEE LAKE TRAIL
SOUTH ACCESS – PLAN

SCALE: 1" = 20'

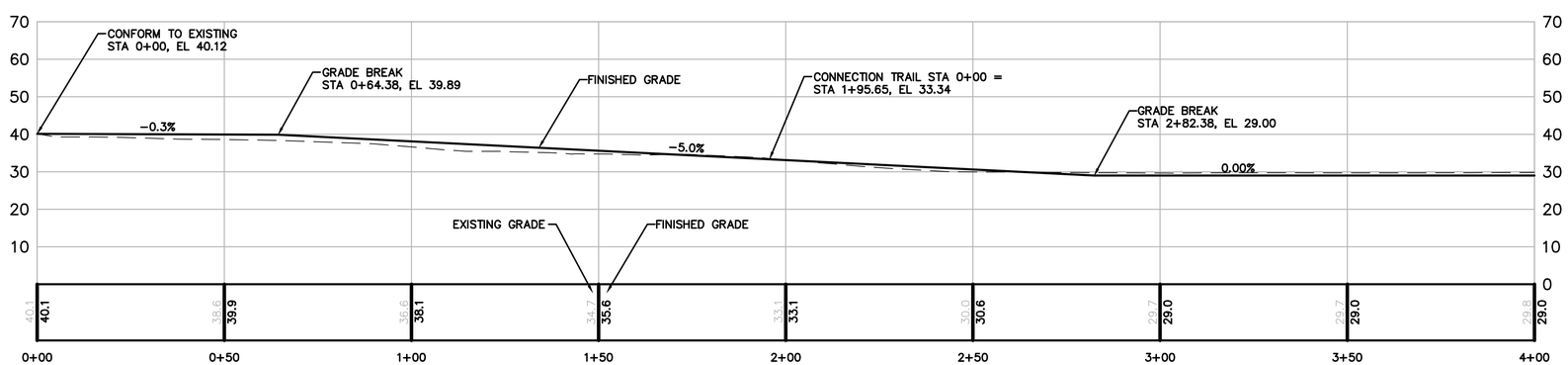

BEE LAKE TRAIL
SOUTH ACCESS – PROFILE

SCALE: 1" = 20'

NOTES:

1. EXISTING PG&E POWER POLES TO REMAIN IN PLACE. A PERMIT WITH PG&E WILL BE NEEDED TO PLACE FILL AROUND THE EXISTING POLES. COORDINATE WITH PG&E TO HOLD POLES DURING FILL PLACEMENT WITHIN 10 FEET OF THE POLE. HAND COMPACTION EQUIPMENT MUST BE USED WITHIN 5 FEET OF THE POLES.
2. CLEAR AND GRUB WITHIN THE CONSTRUCTION LIMIT AND REMOVE EXISTING TREES IDENTIFIED TO BE REMOVED WITHIN PROPOSED TRAIL ALIGNMENT. TRIM BRANCHES OF TRESS THAT ARE TO REMAIN AS NEEDED TO ALLOW FOR CONSTRUCTION. UNLESS NOTED OTHERWISE ELDERBERRY SHRUBS ARE TO BE PROTECTED IN PLACE.
3. SEE SHEET C–24 FOR TREE STUMP REMOVAL DETAILS.
4. ELDERBERRY SHRUB TRIMMING OR RELOCATION TO BE DONE BY AN APPROVED QUALIFIED CONTRACTOR. SEE ELDERBERRY NOTES ON SHEET G–03.

C:\PWWORKING\WEST01\D2918499\C–10.DWG
November 20, 2023

Issue No.	Description	Date	Drwn.	Chkd.	Resp. Engr.	Proj. Mgr.

HORIZONTAL DATUM IS THE CALIFORNIA COORDINATE SYSTEM, ZONE 2 (NAD 83)

VERTICAL DATUM IS NAVD 88

EL NAVD 88 = EL NGVD 29+2.6'

HDR Engineering, Inc.

BAR LENGTH ON ORIGINAL DRAWING EQUALS ONE INCH. ADJUST SCALE ACCORDINGLY.

Project Manager: K. JAMESON
Designed: V. RUSSO
Designed: X
Checked: K. FELLOWS
Drawn: V. RUSSO

SACRAMENTO-SAN JOAQUIN DELTA CONSERVANCY
BEES LAKES HABITAT RESTORATION PROJECT

90% DESIGN

BEES LAKES MULTI-PURPOSE TRAIL
SOUTHERN ACCESS STATION 0+00 TO 4+00
PLAN AND PROFILE

Date	Project No.	Drawing No.	Issue
NOVEMBER, 2023	3223–10358905	C-10	X
Scale: 1" = 20'	File Name: C–10.DWG		

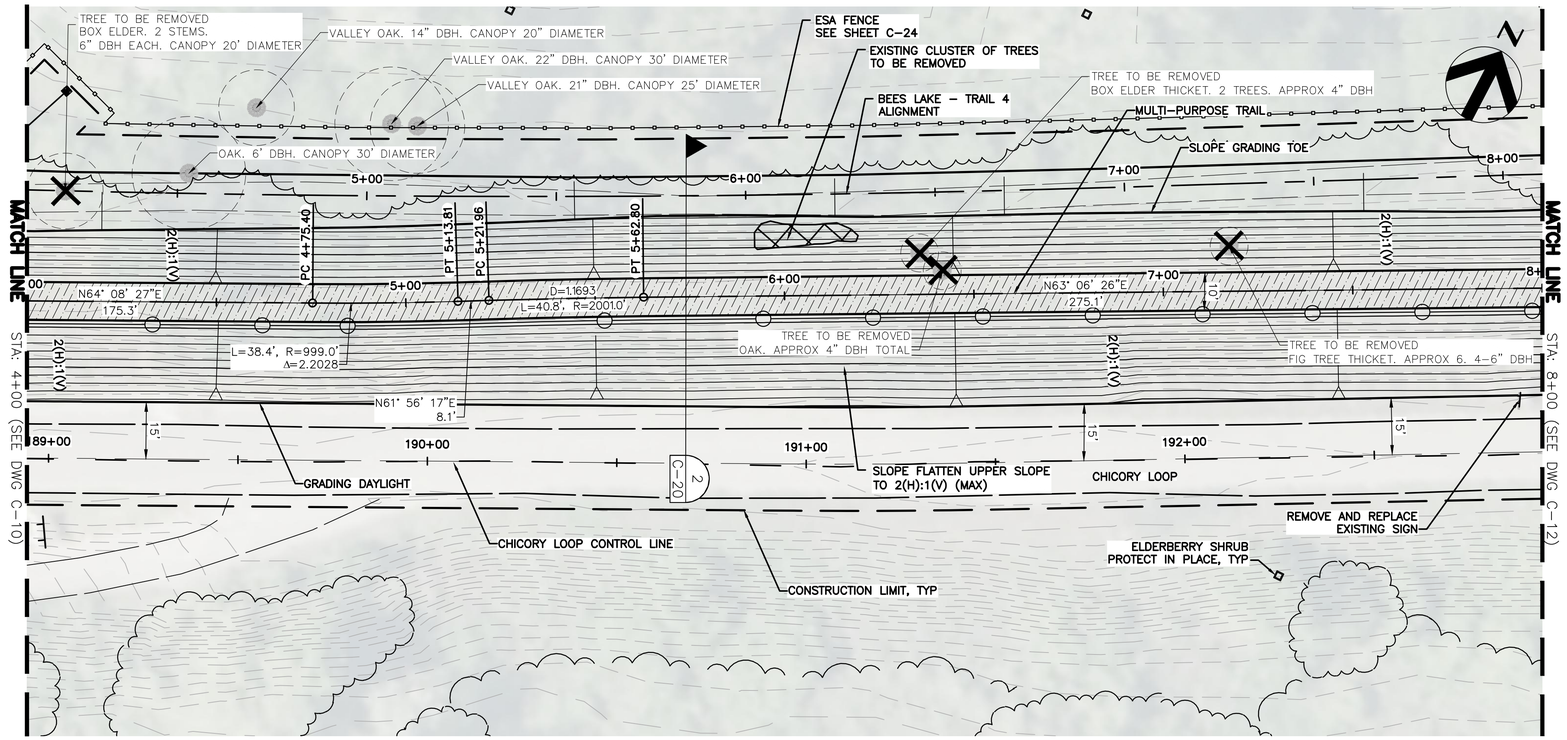

BEES LAKES
MULTI-PURPOSE TRAIL – PLAN

SCALE: 1"=20'

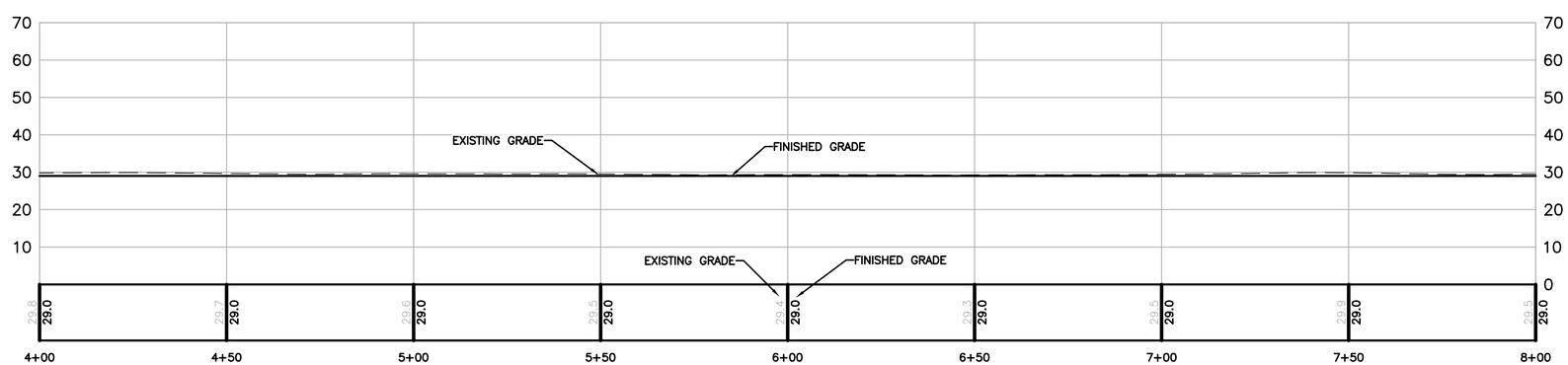

BEES LAKES
MULTI-PURPOSE TRAIL – PROFILE

SCALE: 1"=20'

NOTES:

1. CLEAR AND GRUB WITHIN THE CONSTRUCTION LIMIT AND REMOVE EXISTING TREES IDENTIFIED TO BE REMOVED WITHIN PROPOSED TRAIL ALIGNMENT. TRIM BRANCHES OF TRESS THAT ARE TO REMAIN AS NEEDED TO ALLOW FOR CONSTRUCTION. UNLESS NOTED OTHERWISE ELDERBERRY SHRUBS ARE TO BE PROTECTED IN PLACE.
2. SEE SHEET C–24 FOR TREE STUMP REMOVAL DETAILS.
3. ELDERBERRY SHRUB TRIMMING OR RELOCATION TO BE DONE BY AN APPROVED QUALIFIED CONTRACTOR. SEE ELDERBERRY NOTES ON SHEET G–03.
4. AFTER COMPLETION OF THE MULTI–PURPOSE TRAIL GRADING AND SLOPE FLATTENING FINISH GRADE TRAIL 4 ALIGNMENT BY ROUGH GRADING AWAY FROM THE EMBANKMENT WITH A MINIMUM CROSS SLOPE OF 2 PERCENT WHILE MAKING SURE TO ELIMINATE OBVIOUS HIGH AND LOW SPOTS ALONG THE ALIGNMENT.

C:\PWWORKING\WEST01\D2918499
October 9, 2023

Issue No.	Description	Date	Drwn.	Chkd.	Resp. Engr.	Proj. Mgr.

HORIZONTAL DATUM IS THE CALIFORNIA COORDINATE SYSTEM, ZONE 2 (NAD 83)

VERTICAL DATUM IS NAVD 88

EL NAVD 88 =
EL NGVD 29+2.6'

HDR Engineering, Inc.

BAR LENGTH ON ORIGINAL DRAWING EQUALS ONE INCH. ADJUST SCALE ACCORDINGLY.

Project Manager: K. JAMESON
Designed: V. RUSSO
Designed: X
Checked: K. FELLOWS
Drawn: V. RUSSO

SACRAMENTO-SAN JOAQUIN DELTA CONSERVANCY
BEES LAKES HABITAT RESTORATION PROJECT

90% DESIGN

BEES LAKES MULTI-PURPOSE TRAIL
STATION 4+00 TO 8+00
PLAN AND PROFILE

Date	Project No.	Drawing No.	Issue
NOVEMBER, 2023	3223–10358905	C-11	X
Scale: 1" = 20'	File Name: C–11.DWG		

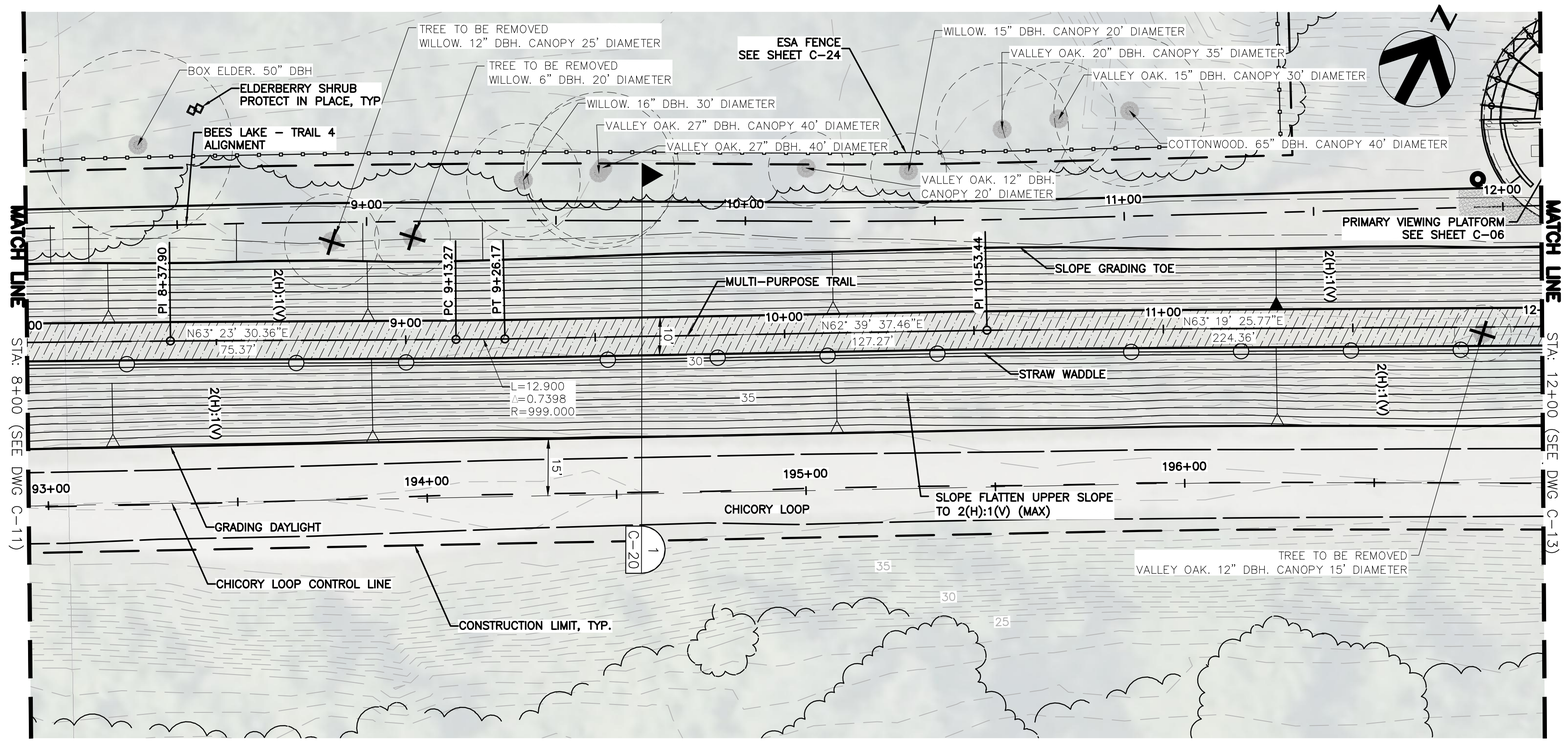

BEES LAKES
MULTI-PURPOSE TRAIL – PLAN

SCALE: 1"=20'

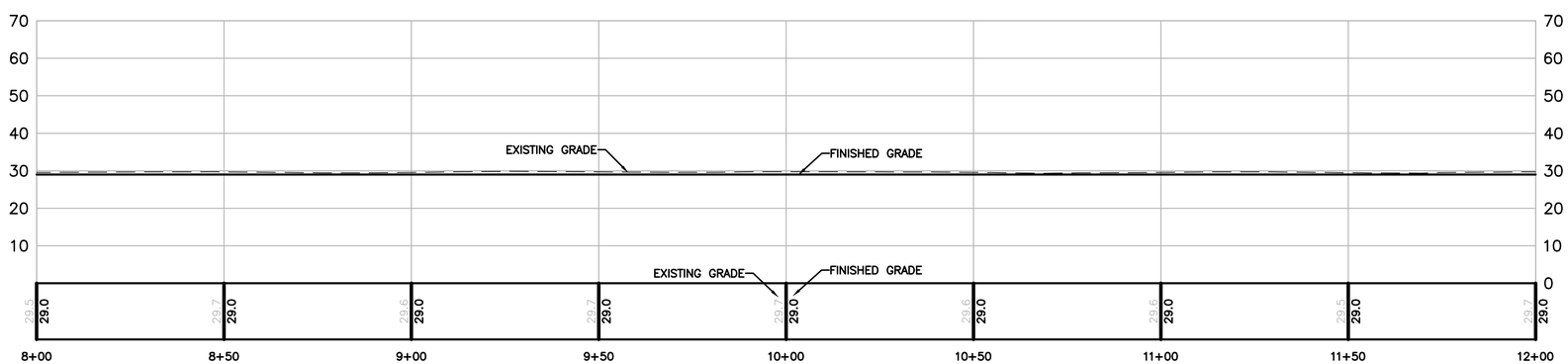

BEES LAKES
MULTI-PURPOSE TRAIL – PROFILE

SCALE: 1"=20'

NOTES:

1. CLEAR AND GRUB WITHIN THE CONSTRUCTION LIMIT AND REMOVE EXISTING TREES IDENTIFIED TO BE REMOVED WITHIN PROPOSED TRAIL ALIGNMENT. TRIM BRANCHES OF TRESS THAT ARE TO REMAIN AS NEEDED TO ALLOW FOR CONSTRUCTION. UNLESS NOTED OTHERWISE ELDERBERRY SHRUBS ARE TO BE PROTECTED IN PLACE.
2. SEE SHEET C–24 FOR TREE STUMP REMOVAL DETAILS.
3. ELDERBERRY SHRUB TRIMMING OR RELOCATION TO BE DONE BY AN APPROVED QUALIFIED CONTRACTOR. SEE ELDERBERRY NOTES ON SHEET G–03.
4. AFTER COMPLETION OF THE MULTI–PURPOSE TRAIL GRADING AND SLOPE FLATTENING FINISH GRADE TRAIL 4 ALIGNMENT BY ROUGH GRADING AWAY FROM THE EMBANKMENT WITH A MINIMUM CROSS SLOPE OF 2 PERCENT WHILE MAKING SURE TO ELIMINATE OBVIOUS HIGH AND LOW SPOTS ALONG THE ALIGNMENT.

C:\PWWORKING\WEST01\D2918499\C-12.DWG
October 9, 2023

Issue No.	Description	Date	Drwn.	Chkd.	Resp. Engr.	Proj. Mgr.

HORIZONTAL DATUM IS THE CALIFORNIA COORDINATE SYSTEM, ZONE 2 (NAD 83)

VERTICAL DATUM IS NAVD 88

EL NAVD 88 =
EL NGVD 29+2.6'

HDR Engineering, Inc.

BAR LENGTH ON ORIGINAL DRAWING EQUALS ONE INCH. ADJUST SCALE ACCORDINGLY.

Project Manager: K. JAMESON
Designed: V. RUSSO
Designed: X
Checked: K. FELLOWS
Drawn: V. RUSSO

SACRAMENTO-SAN JOAQUIN DELTA CONSERVANCY
BEES LAKES HABITAT RESTORATION PROJECT

90% DESIGN

BEES LAKES MULTI-PURPOSE TRAIL
STATION 8+00 TO 12+00
PLAN AND PROFILE

Date	Project No.	Drawing No.	Issue
NOVEMBER, 2023	3223–10358905	C-12	X
Scale: 1" = 20'	File Name: C–12.DWG		

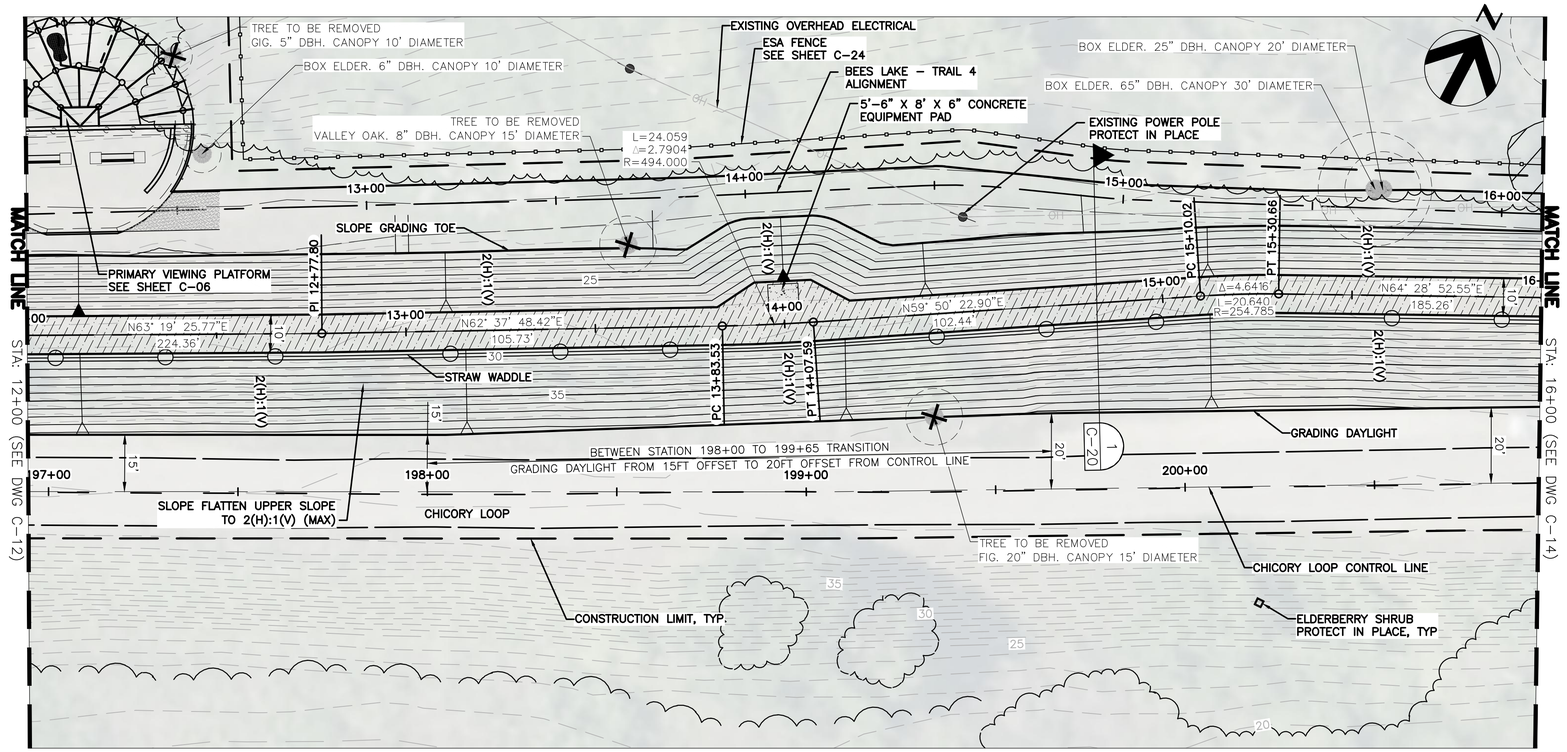

BEES LAKES
MULTI-PURPOSE TRAIL – PLAN

SCALE: 1"=20'

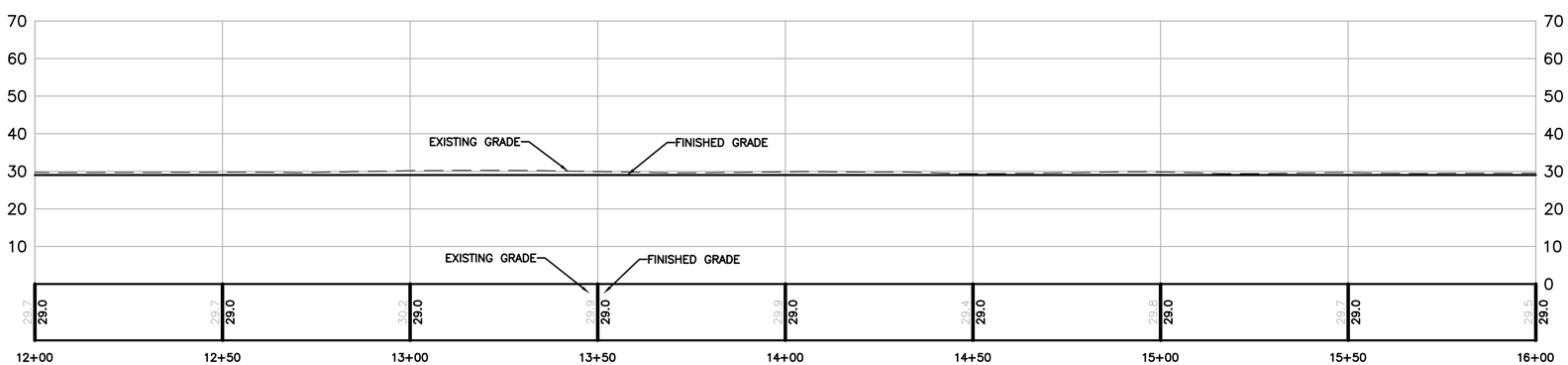

BEES LAKES
MULTI-PURPOSE TRAIL – PROFILE

SCALE: 1"=20'

NOTES:

1. CLEAR AND GRUB WITHIN THE CONSTRUCTION LIMIT AND REMOVE EXISTING TREES IDENTIFIED TO BE REMOVED WITHIN PROPOSED TRAIL ALIGNMENT. TRIM BRANCHES OF TRESS THAT ARE TO REMAIN AS NEEDED TO ALLOW FOR CONSTRUCTION. UNLESS NOTED OTHERWISE ELDERBERRY SHRUBS ARE TO BE PROTECTED IN PLACE.
2. SEE SHEET C-24 FOR TREE STUMP REMOVAL DETAILS.
3. ELDERBERRY SHRUB TRIMMING OR RELOCATION TO BE DONE BY AN APPROVED QUALIFIED CONTRACTOR. SEE ELDERBERRY NOTES ON SHEET G-03.
4. AFTER COMPLETION OF THE MULTI-PURPOSE TRAIL GRADING AND SLOPE FLATTENING FINISH GRADE TRAIL 4 ALIGNMENT BY ROUGH GRADING AWAY FROM THE EMBANKMENT WITH A MINIMUM CROSS SLOPE OF 2 PERCENT WHILE MAKING SURE TO ELIMINATE OBVIOUS HIGH AND LOW SPOTS ALONG THE ALIGNMENT.

C:\PWWORKING\WEST01\D2918499\C-13.DWG
October 9, 2023

Issue No.	Description	Date	Drwn.	Chkd.	Resp. Engr.	Proj. Mgr.

HORIZONTAL DATUM IS THE CALIFORNIA COORDINATE SYSTEM, ZONE 2 (NAD 83)

VERTICAL DATUM IS NAVD 88

EL NAVD 88 =
EL NGVD 29+2.6'

HDR Engineering, Inc.

BAR LENGTH ON ORIGINAL DRAWING EQUALS ONE INCH. ADJUST SCALE ACCORDINGLY.

Project Manager: K. JAMESON
Designed: V. RUSSO
Designed: X
Checked: K. FELLOWS
Drawn: V. RUSSO

SACRAMENTO-SAN JOAQUIN DELTA CONSERVANCY
BEES LAKES HABITAT RESTORATION PROJECT

90% DESIGN

BEES LAKES MULTI-PURPOSE TRAIL
STATION 12+00 TO 16+00
PLAN AND PROFILE

Date	Project No.	Drawing No.	Issue
NOVEMBER, 2023	3223-10358905	C-13	X
Scale: 1" = 20'	File Name: C-13.DWG		

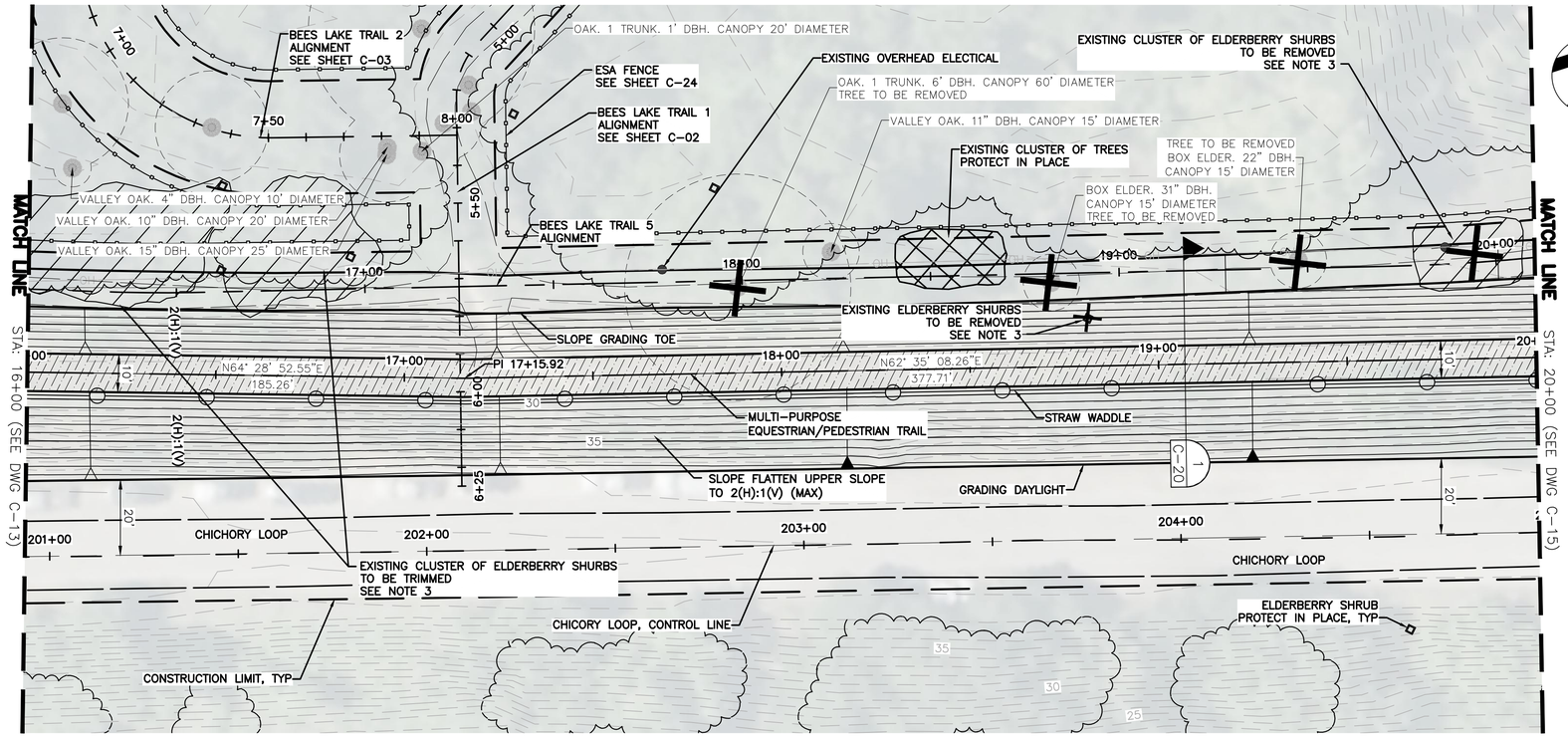

BEES LAKES
MULTI-PURPOSE TRAIL – PLAN

SCALE: 1"=20'

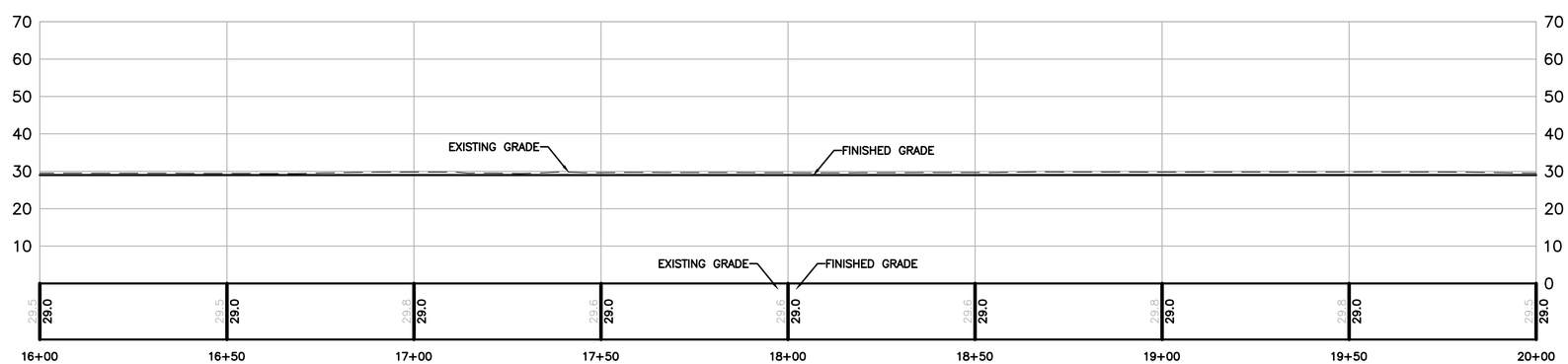

BEES LAKES
MULTI-PURPOSE TRAIL – PROFILE

SCALE: 1"=20'

NOTES:

1. CLEAR AND GRUB WITHIN THE CONSTRUCTION LIMIT AND REMOVE EXISTING TREES IDENTIFIED TO BE REMOVED WITHIN PROPOSED TRAIL ALIGNMENT. TRIM BRANCHES OF TRESS THAT ARE TO REMAIN AS NEEDED TO ALLOW FOR CONSTRUCTION. UNLESS NOTED OTHERWISE ELDERBERRY SHRUBS ARE TO BE PROTECTED IN PLACE.
2. SEE SHEET C–24 FOR TREE STUMP REMOVAL DETAILS.
3. ELDERBERRY SHRUB TRIMMING OR RELOCATION TO BE DONE BY AN APPROVED QUALIFIED CONTRACTOR. SEE ELDERBERRY NOTES ON SHEET G–03.
4. AFTER COMPLETION OF THE MULTI–PURPOSE TRAIL GRADING AND SLOPE FLATTENING FINISH GRADE TRAIL 4 ALIGNMENT BY ROUGH GRADING AWAY FROM THE EMBANKMENT WITH A MINIMUM CROSS SLOPE OF 2 PERCENT WHILE MAKING SURE TO ELIMINATE OBVIOUS HIGH AND LOW SPOTS ALONG THE ALIGNMENT.

C:\PWWORKING\WEST01\D2918499\C-14.DWG
November 20, 2023

Issue No.	Description	Date	Drwn.	Chkd.	Resp. Engr.	Proj. Mgr.

HORIZONTAL DATUM IS THE CALIFORNIA COORDINATE SYSTEM, ZONE 2 (NAD 83)

VERTICAL DATUM IS NAVD 88

EL NAVD 88 = EL NGVD 29+2.6'

HDR Engineering, Inc.

BAR LENGTH ON ORIGINAL DRAWING EQUALS ONE INCH. ADJUST SCALE ACCORDINGLY.

Project Manager: K. JAMESON
Designed: V. RUSSO
Designed: X
Checked: K. FELLOWS
Drawn: V. RUSSO

SACRAMENTO-SAN JOAQUIN DELTA CONSERVANCY
BEES LAKES HABITAT RESTORATION PROJECT

90% DESIGN

BEES LAKES MULTI-PURPOSE TRAIL STATION 16+00 TO 20+00 PLAN AND PROFILE

Date	Project No.	Drawing No.	Issue
NOVEMBER, 2023	3223–10358905	C-14	X
Scale: 1" = 20'	File Name: C–14.DWG		

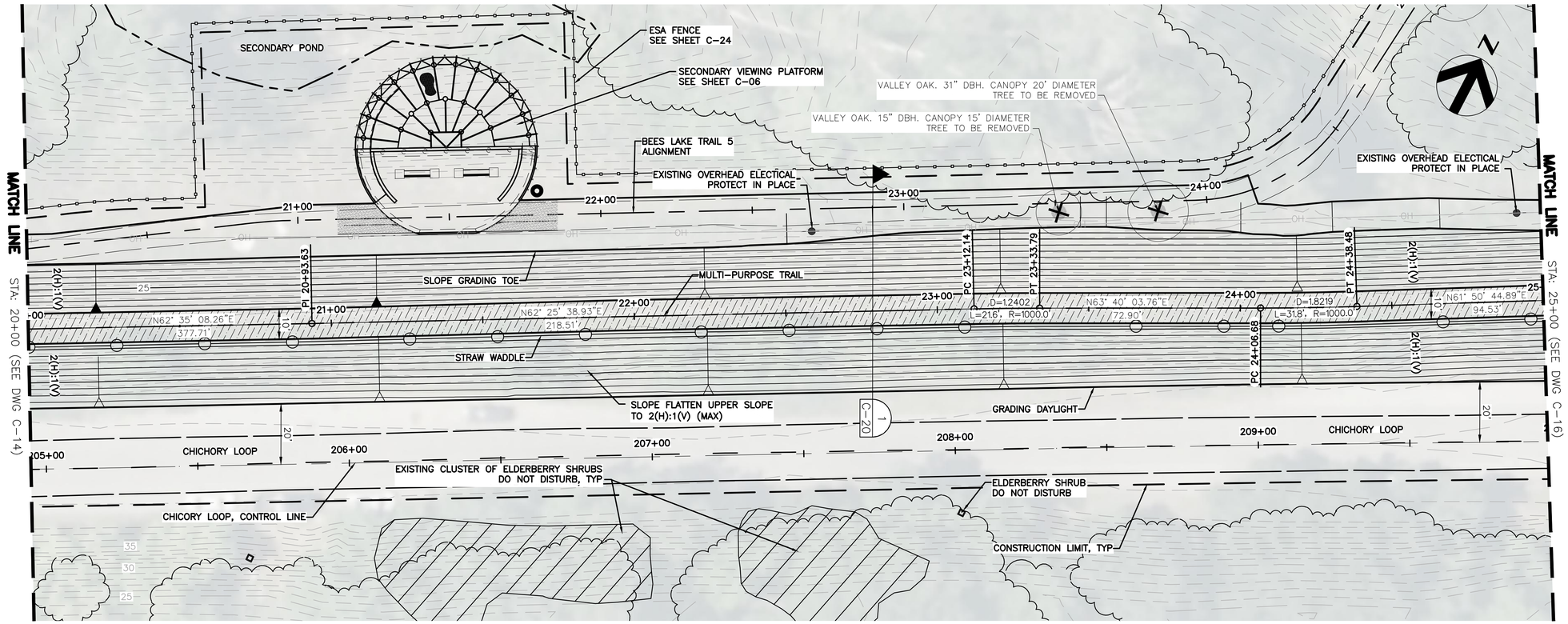

BEES LAKES
MULTI-PURPOSE TRAIL – PLAN

SCALE: 1"=20'

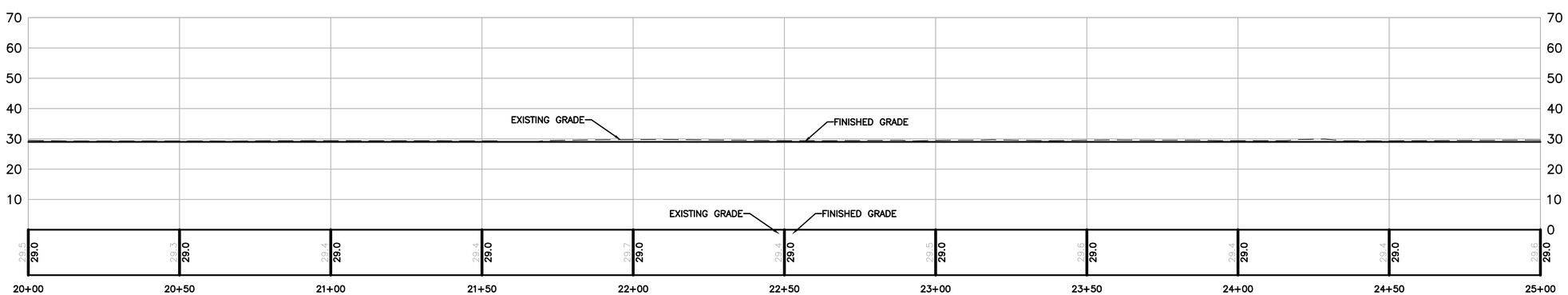

BEES LAKES
MULTI-PURPOSE TRAIL – PROFILE

SCALE: 1"=20'

NOTES:

1. CLEAR AND GRUB WITHIN THE CONSTRUCTION LIMIT AND REMOVE EXISTING TREES IDENTIFIED TO BE REMOVED WITHIN PROPOSED TRAIL ALIGNMENT. TRIM BRANCHES OF TRESS THAT ARE TO REMAIN AS NEEDED TO ALLOW FOR CONSTRUCTION. UNLESS NOTED OTHERWISE ELDERBERRY SHRUBS ARE TO BE PROTECTED IN PLACE.
2. SEE SHEET C-24 FOR TREE STUMP REMOVAL DETAILS.
3. ELDERBERRY SHRUB TRIMMING OR RELOCATION TO BE DONE BY AN APPROVED QUALIFIED CONTRACTOR. SEE ELDERBERRY NOTES ON SHEET G-03.
4. AFTER COMPLETION OF THE MULTI-PURPOSE TRAIL GRADING AND SLOPE FLATTENING FINISH GRADE TRAIL 4 ALIGNMENT BY ROUGH GRADING AWAY FROM THE EMBANKMENT WITH A MINIMUM CROSS SLOPE OF 2 PERCENT WHILE MAKING SURE TO ELIMINATE OBVIOUS HIGH AND LOW SPOTS ALONG THE ALIGNMENT.

C:\PWWORKING\WEST01\D2918499\C-15.DWG
November 20, 2023

Issue No.	Description	Date	Drwn.	Chkd.	Resp. Engr.	Proj. Mgr.

HORIZONTAL DATUM IS THE CALIFORNIA COORDINATE SYSTEM, ZONE 2 (NAD 83)

VERTICAL DATUM IS NAVD 88

EL NAVD 88 =
EL NGVD 29+2.6'

HDR Engineering, Inc.

BAR LENGTH ON ORIGINAL DRAWING EQUALS ONE INCH. ADJUST SCALE ACCORDINGLY.

Project Manager: K. JAMESON
Designed: V. RUSSO
Designed: X
Checked: K. FELLOWS
Drawn: V. RUSSO

SACRAMENTO-SAN JOAQUIN DELTA CONSERVANCY
BEES LAKES HABITAT RESTORATION PROJECT

90% DESIGN

BEES LAKES MULTI-PURPOSE TRAIL
STATION 20+00 TO 25+00
PLAN AND PROFILE

Date	Project No.	Drawing No.	Issue
NOVEMBER, 2023	3223-10358905	C-15	X
Scale: 1" = 20'	File Name: C-15.DWG		

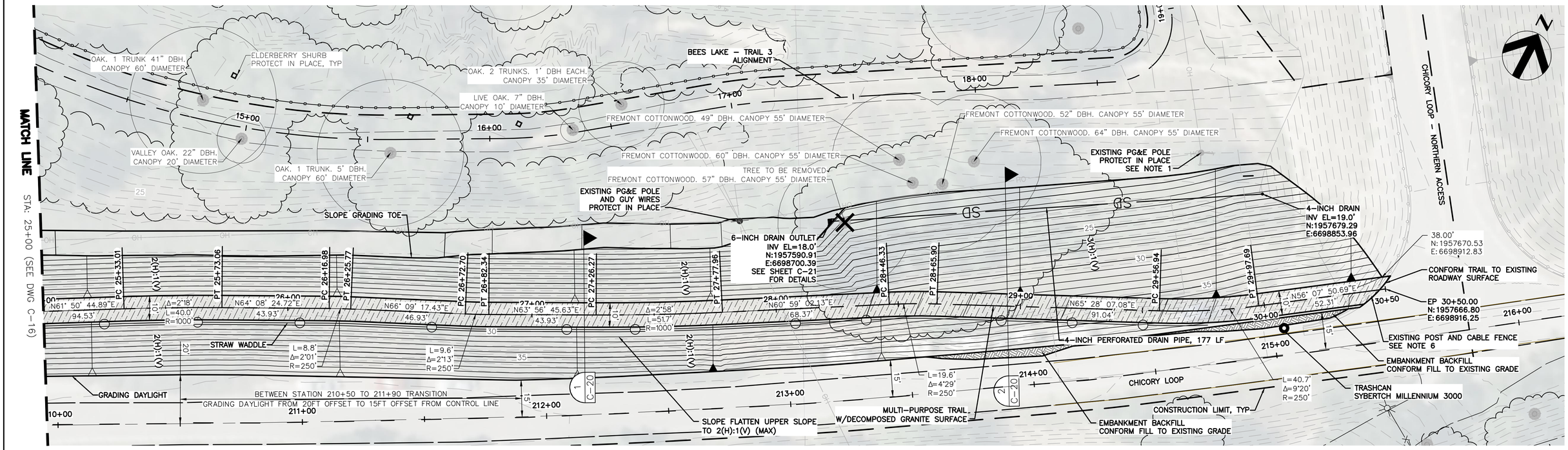

BEES LAKE TRAIL
NORTH ACCESS – PLAN

SCALE: 1" = 20'

NOTES:

1. EXISTING PG&E POWER POLES TO REMAIN IN PLACE. A PERMIT WITH PG&E WILL BE NEEDED TO PLACE FILL AROUND THE EXISTING POLES. COORDINATE WITH PG&E TO HOLD POLES DURING FILL PLACEMENT WITHIN 10 FEET OF THE POLE. HAND COMPACTION EQUIPMENT MUST BE USED WITHIN 5 FEET OF THE POLES.
2. CLEAR AND GRUB WITHIN THE CONSTRUCTION LIMIT AND REMOVE EXISTING TREES IDENTIFIED TO BE REMOVED WITHIN PROPOSED TRAIL ALIGNMENT. TRIM BRANCHES OF TRESS THAT ARE TO REMAIN AS NEEDED TO ALLOW FOR CONSTRUCTION. UNLESS NOTED OTHERWISE ELDERBERRY SHRUBS ARE TO BE PROTECTED IN PLACE.
3. SEE SHEET C-24 FOR TREE STUMP REMOVAL DETAILS.
4. ELDERBERRY SHRUB TRIMMING OR RELOCATION TO BE DONE BY AN APPROVED QUALIFIED CONTRACTOR. SEE ELDERBERRY NOTES ON SHEET G-03.
5. AFTER COMPLETION OF THE MULTI-PURPOSE TRAIL GRADING AND SLOPE FLATTENING FINISH GRADE TRAIL 4 ALIGNMENT BY ROUGH GRADING AWAY FROM THE EMBANKMENT WITH A MINIMUM CROSS SLOPE OF 2 PERCENT WHILE MAKING SURE TO ELIMINATE OBVIOUS HIGH AND LOW SPOTS ALONG THE ALIGNMENT.
6. REMOVE EXISTING POST AND CABLE FENCE TO ONLY THE EXTENT NECESSARY TO CONSTRUCT AND PROVIDE ACCESS TO THE NORTHERN TRAIL ACCESS RAMP.

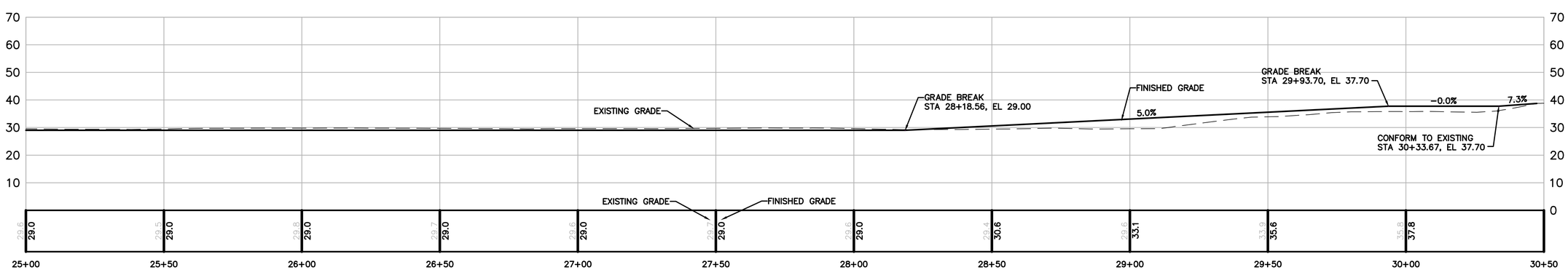

BEES LAKE TRAIL
NORTH ACCESS – PROFILE

SCALE: 1" = 20'

90% DESIGN

Issue No.	Description	Date	Drwn.	Chkd.	Resp. Engr.	Proj. Mgr.

HORIZONTAL DATUM IS THE CALIFORNIA COORDINATE SYSTEM, ZONE 2 (NAD 83)

VERTICAL DATUM IS NAVD 88

EL NAVD 88 = EL NGVD 29+2.6'

HDR Engineering, Inc.

BAR LENGTH ON ORIGINAL DRAWING EQUALS ONE INCH. ADJUST SCALE ACCORDINGLY.

Project Manager: K. JAMESON
Designed: V. RUSSO
Designed: X
Checked: K. FELLOWS
Drawn: V. RUSSO

SACRAMENTO-SAN JOAQUIN DELTA CONSERVANCY
BEES LAKES HABITAT RESTORATION PROJECT

BEES LAKES MULTI-PURPOSE TRAIL
NORTHERN ACCESS STATION 25+00 TO 30+50
PLAN AND PROFILE

Date	Project No.	Drawing No.	Issue
NOVEMBER, 2023	3223-10358905	C-16	X
Scale: 1" = 20'	File Name: C-16.DWG		

C:\PWWORKING\WEST01\D2918499\C-16.DWG
November 20, 2023

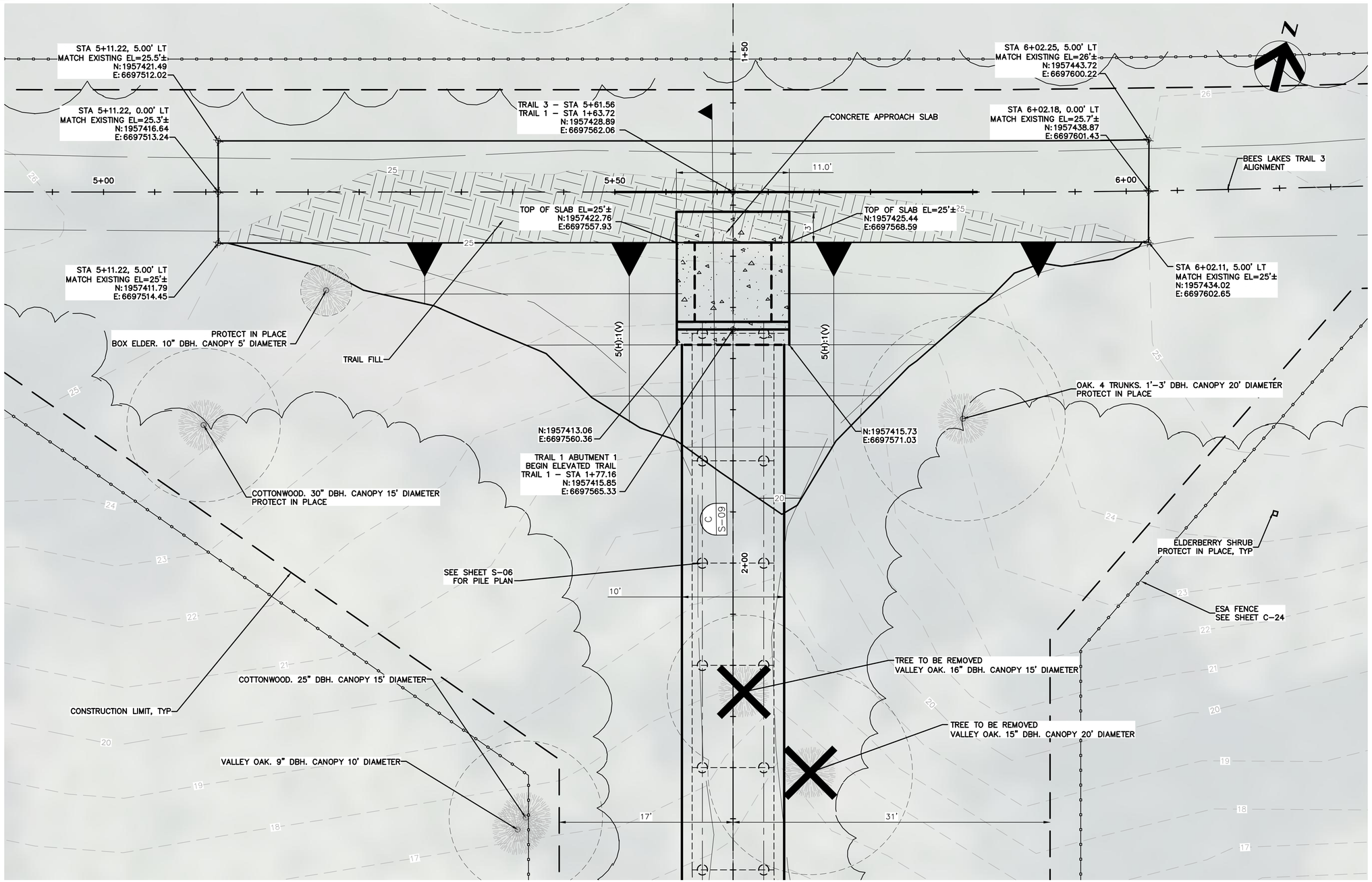

NOTES:

1. TREE SURVEY TO BE PERFORMED POST 90% DESIGN. REMOVE EXISTING TREES WITHIN PROPOSED ELEVATED TRAIL ALIGNMENT. TRIM BRANCHES OF TRESS THAT REMAIN TO ALLOW FOR CONSTRUCTION.

TRAIL 1 – ABUTMENT 1
GRADING PLAN

SCALE: 1" = 5'

C:\PWWORKING\WEST01\D2918499\C-17.DWG
November 20, 2023

Issue No.	Description	Date	Drwn.	Chkd.	Resp. Engr.	Proj. Mgr.

HORIZONTAL DATUM IS THE CALIFORNIA COORDINATE SYSTEM, ZONE 2 (NAD 83)

VERTICAL DATUM IS NAVD 88

EL NAVD 88 =
EL NGVD 29+2.6'

HDR Engineering, Inc.

BAR LENGTH ON ORIGINAL DRAWING EQUALS ONE INCH. ADJUST SCALE ACCORDINGLY.

Project Manager: K. JAMESON
Designed: V. RUSSO
Designed: X
Checked: K. FELLOWS
Drawn: V. RUSSO

SACRAMENTO-SAN JOAQUIN DELTA CONSERVANCY
BEES LAKES HABITAT RESTORATION PROJECT

90% DESIGN

BEES LAKES TRAIL 1
ABUTMENT 1
GRADING PLAN

Date	Project No.	Drawing No.	Issue
NOVEMBER, 2023	3223–10358905	C-17	X
Scale: 1" = 20'	File Name: C–17.DWG		

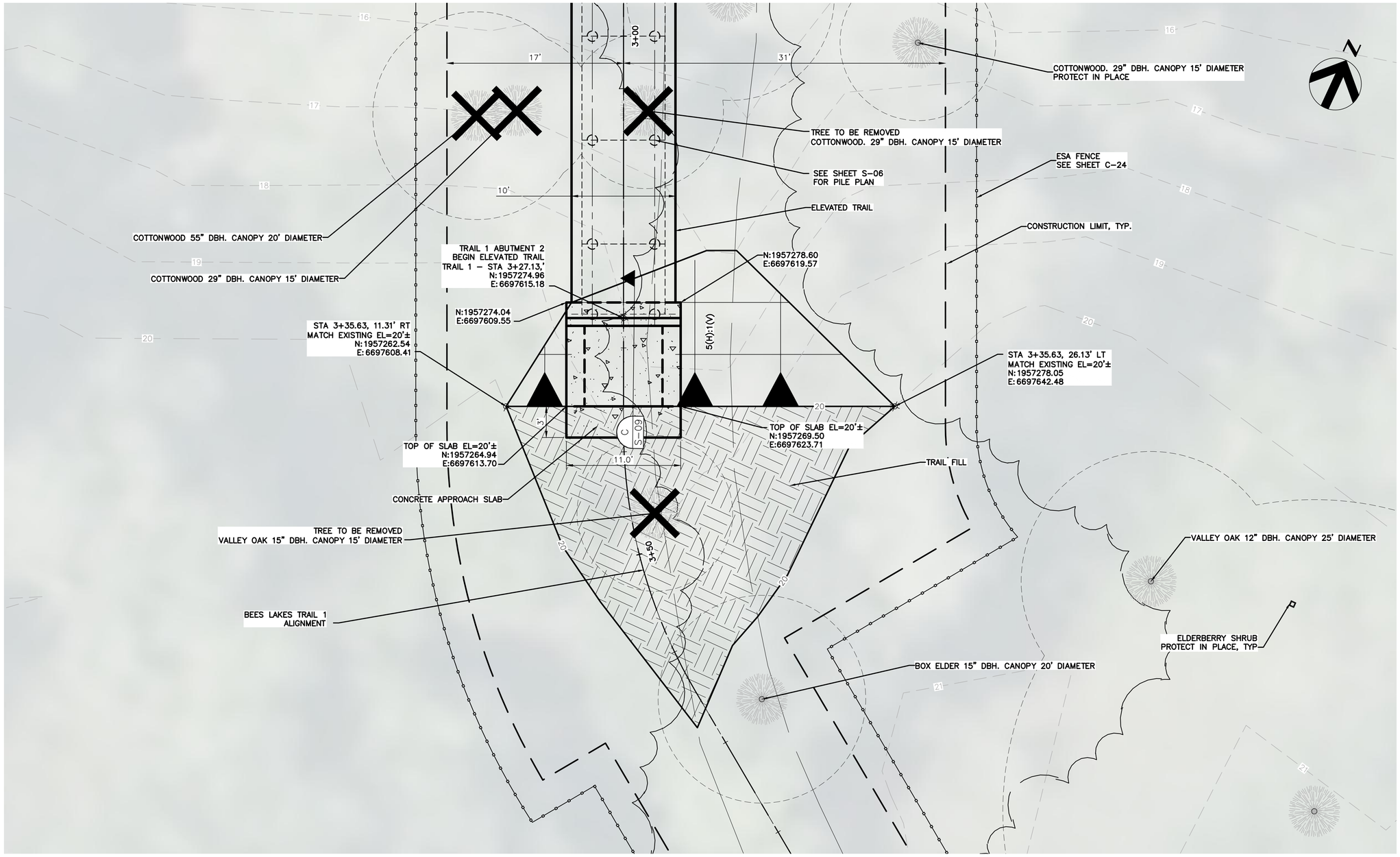

NOTES:

1. TREE SURVEY TO BE PERFORMED POST 90% DESIGN. REMOVE EXISTING TREES WITHIN PROPOSED ELEVATED TRAIL ALIGNMENT. TRIM BRANCHES OF TRESS THAT REMAIN TO ALLOW FOR CONSTRUCTION.

TRAIL 1 – ABUTMENT 2
GRADING PLAN

SCALE: 1" = 5'

C:\PWWORKING\WEST01\D2918499\C-18.DWG
November 20, 2023

Issue No.	Description	Date	Drwn.	Chkd.	Resp. Engr.	Proj. Mgr.

HORIZONTAL DATUM IS THE CALIFORNIA COORDINATE SYSTEM, ZONE 2 (NAD 83)

VERTICAL DATUM IS NAVD 88

EL NAVD 88 =
EL NGVD 29+2.6'

HDR Engineering, Inc.

BAR LENGTH ON ORIGINAL DRAWING EQUALS ONE INCH. ADJUST SCALE ACCORDINGLY.

Project Manager: K. JAMESON
Designed: V. RUSSO
Designed: X
Checked: K. FELLOWS
Drawn: V. RUSSO

SACRAMENTO-SAN JOAQUIN DELTA CONSERVANCY
BEES LAKES HABITAT RESTORATION PROJECT

90% DESIGN

BEES LAKES TRAIL 1
ABUTMENT 2
GRADING PLAN

Date	Project No.	Drawing No.	Issue
NOVEMBER, 2023	3223-10358905	C-18	X
Scale: 1" = 5'	File Name: C-18.DWG		

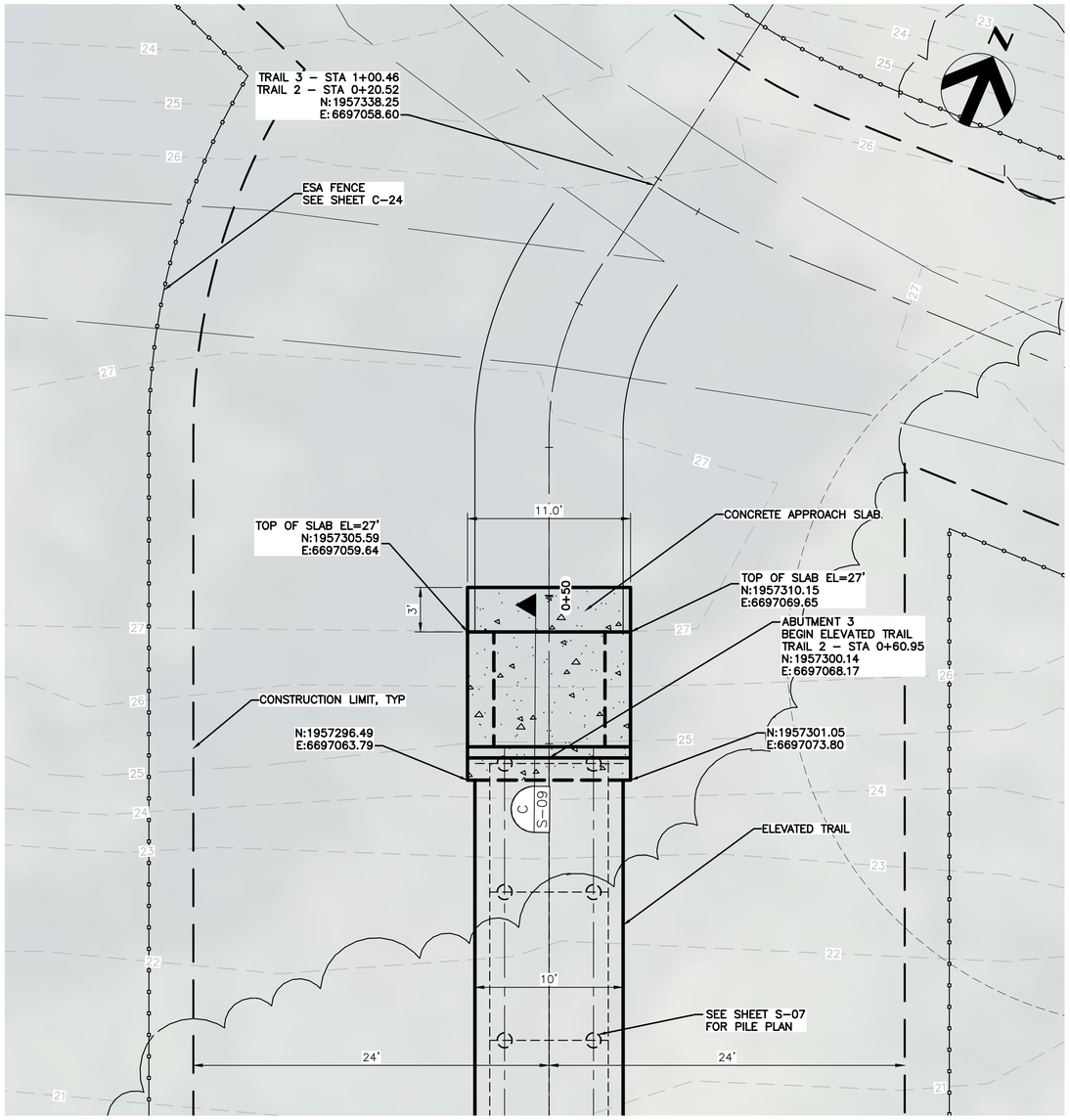

TRAIL 2 – PLAN

1"=5'

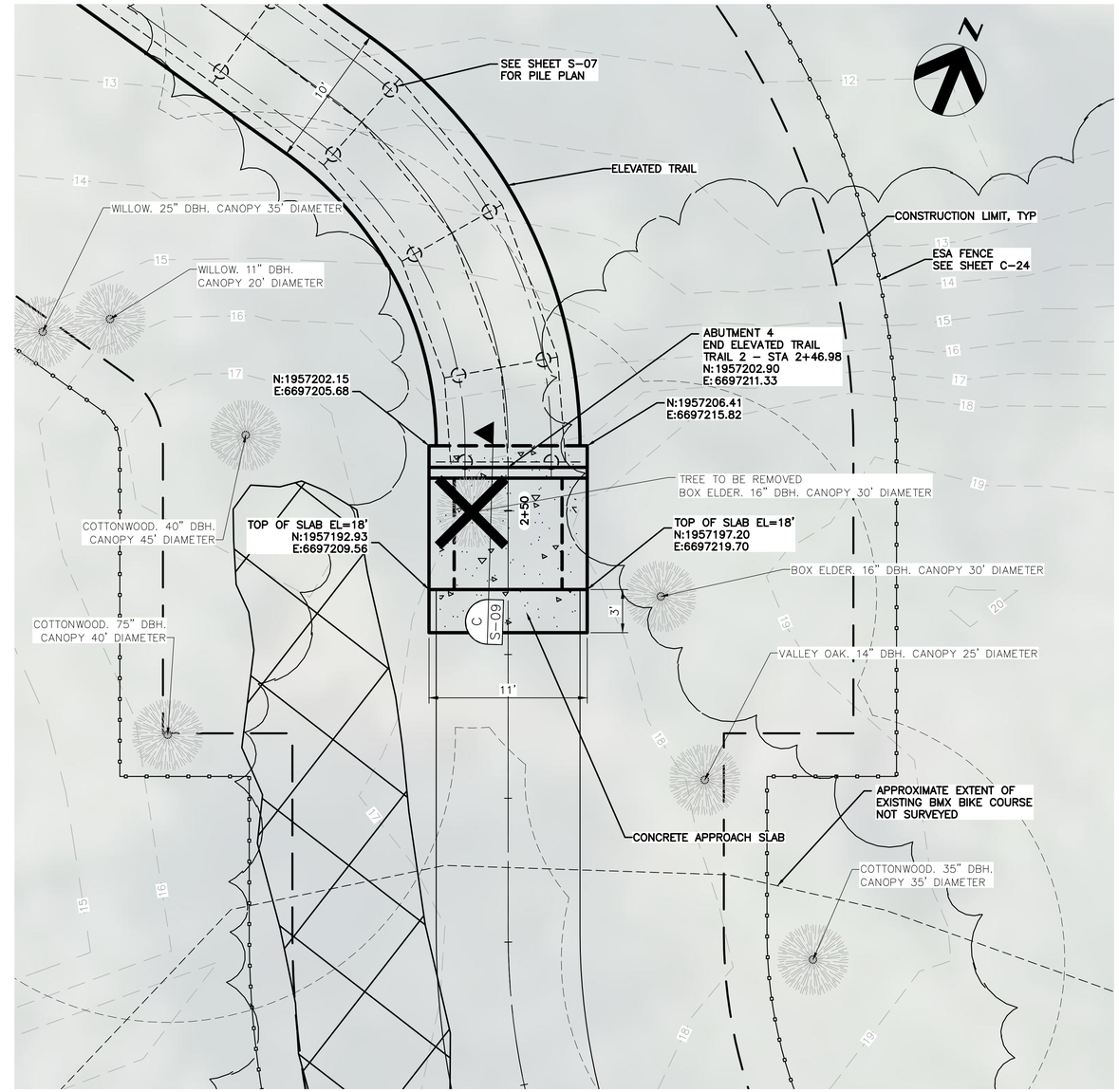

TRAIL 2 – PLAN

1"=5'

NOTES:

1. TREE SURVEY TO BE PERFORMED POST 90% DESIGN. REMOVE EXISTING TREES WITHIN PROPOSED ELEVATED TRAIL ALIGNMENT. TRIM BRANCHES OF TRESS THAT REMAIN TO ALLOW FOR CONSTRUCTION.

90% DESIGN

Issue No.	Description	Date	Drwn.	Chkd.	Resp. Engr.	Proj. Mgr.

HORIZONTAL DATUM IS THE CALIFORNIA COORDINATE SYSTEM, ZONE 2 (NAD 83)

VERTICAL DATUM IS NAVD 88

EL NAVD 88 =
EL NGVD 29+2.6'

HDR Engineering, Inc.

BAR LENGTH ON ORIGINAL DRAWING EQUALS ONE INCH. ADJUST SCALE ACCORDINGLY.

Project Manager: K. JAMESON
Designed: V. RUSSO
Designed: X
Checked: K. FELLOWS
Drawn: V. RUSSO

SACRAMENTO-SAN JOAQUIN DELTA CONSERVANCY
BEES LAKES HABITAT RESTORATION PROJECT

BEES LAKES TRAIL 2
ABUTMENT SITE PLANS

Date	Project No.	Drawing No.	Issue
NOVEMBER, 2023	3223–10358905	0C-19	X
Scale: 1" = 5'	File Name: C–19.DWG		

C:\PWWORKING\WEST01\D2918499\C-19.DWG
November 20, 2023

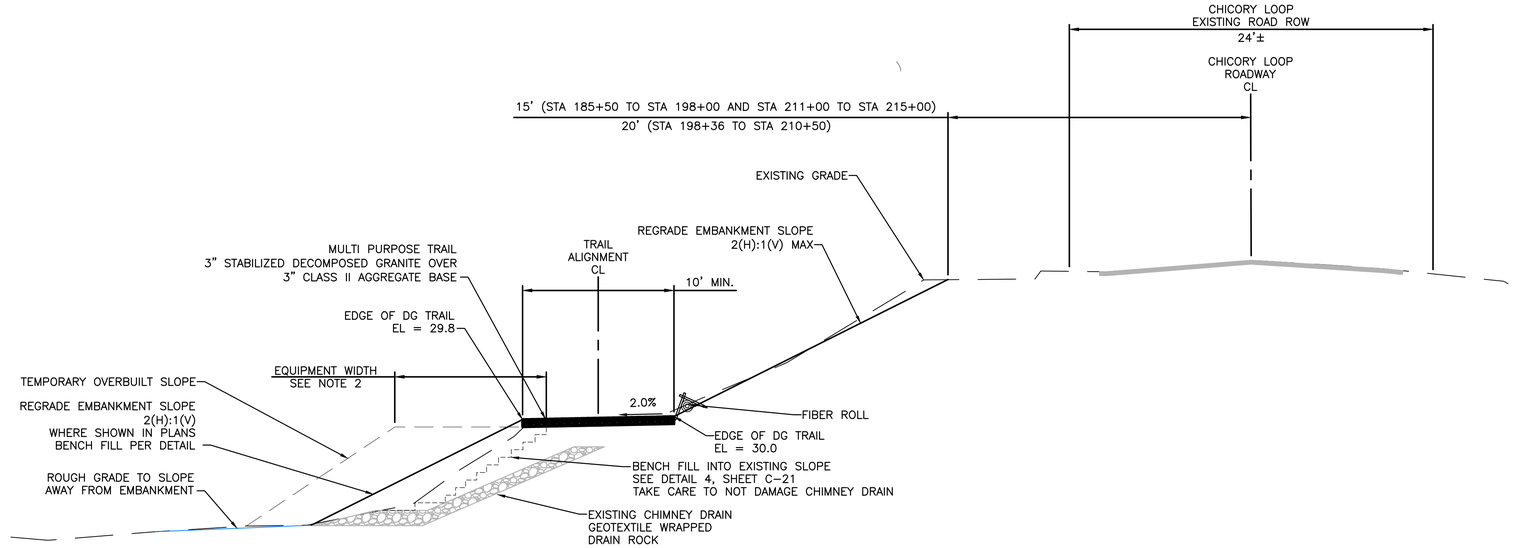

EQUESTRIAN TRAIL TYPICAL SECTION
FILL CONDITION: STA 185+50 TO STA 188+50 AND STA 213+50 TO STA 215+00

1" = 5'

1 / –

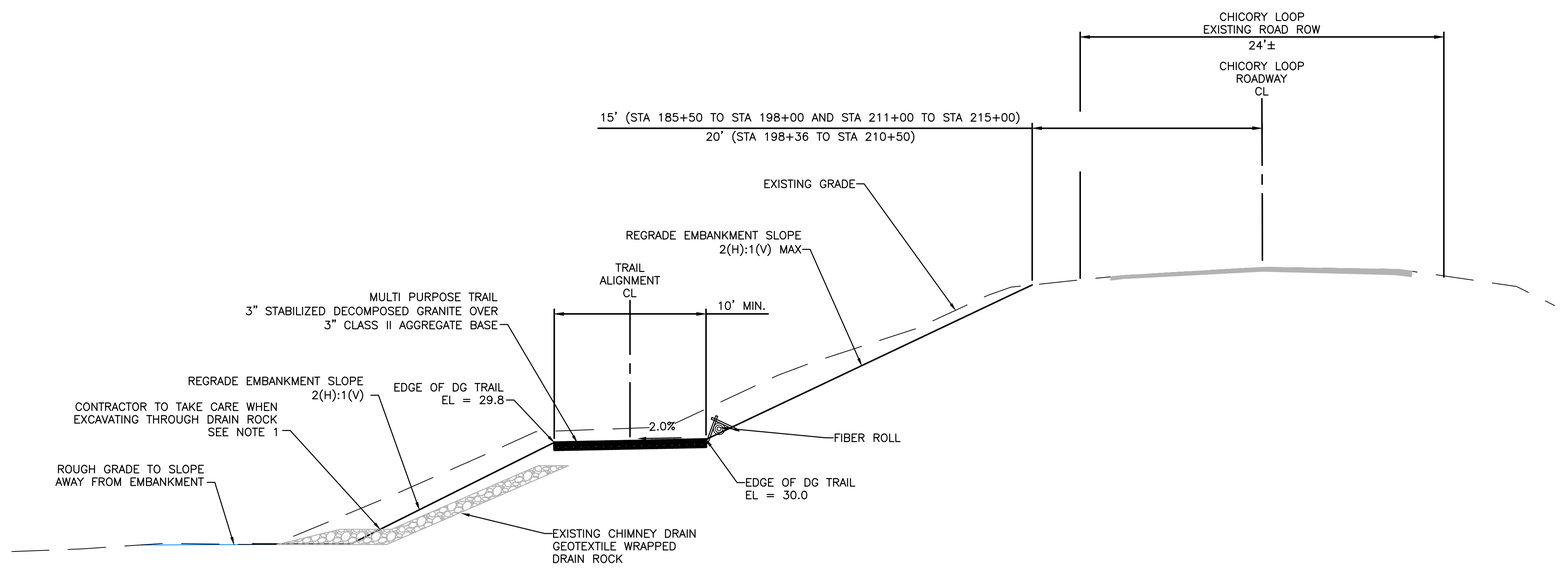

EQUESTRIAN TRAIL TYPICAL SECTION CUT CONDITION:
STA 189+00 TO STA 212+50

1" = 5'

2 / –

NOTES:

1. EXCAVATION THROUGH THE GEOTEXTILE FABRIC MUST BE DONE IN A MANNER THAT PREVENTS PULLING OF THE FABRIC FOR THE REMAINING CHIMNEY DRAIN ROCK. THIS PROCESS MAY REQUIRE THE CONTRACTOR TO EXPOSE THE FABRIC AND HAND CUT PRIOR TO EXCAVATING THROUGH THE DRAIN ROCK. CONTRACTOR WILL BE REQUIRED TO RECONSTRUCT THE BURIED CHIMNEY DRAIN AT NO COST TO THE OWNER IN THE EVENT THAT THE EXISTING FABRIC IS PULLED OUT IN A MANNER THAT CAUSES DAMAGE TO THE EXISTING CHIMNEY DRAIN.
2. FOR SECTIONS REQUIRING SLIVER FILL, OVERBUILD SLOPE SECTION TO THE WIDTH OF THE EQUIPMENT BEING USED AND THEN CUT SLOPES BACK TO THE FINISHED GRADE.

C:\PWWORKING\WEST01\D2918499\C-20.DWG
November 20, 2023

Issue No.	Description	Date	Drwn.	Chkd.	Resp. Engr.	Proj. Mgr.
–	–	–	–	–	–	–

HORIZONTAL DATUM IS THE CALIFORNIA COORDINATE SYSTEM, ZONE 2 (NAD 83)

VERTICAL DATUM IS NAVD 88

EL NAVD 88 =
EL NGVD 29+2.6'

HDR Engineering, Inc.

BAR LENGTH ON ORIGINAL DRAWING EQUALS ONE INCH. ADJUST SCALE ACCORDINGLY.

Project Manager: K. JAMESON
Designed: V. RUSSO
Designed: X
Checked: K. FELLOWS
Drawn: V. RUSSO

SACRAMENTO-SAN JOAQUIN DELTA CONSERVANCY
BEES LAKES HABITAT RESTORATION PROJECT

90% DESIGN

TRAIL DETAILS I

Date	Project No.	Drawing No.	Issue
NOVEMBER, 2023	3223-10358905	C-20	X
Scale: AS NOTED	File Name: C-20.DWG		

NOTES:

1. PROVIDE DRAIN ROCK THAT COMPLIES WITH THE REQUIREMENTS OF CALTRANS STANDARD SPECIFICATIONS SECTION 72–2 ROCK SLOPE PROTECTION (LATEST EDITION) FOR A MATERIAL TYPE OF CLASS II RSP PER SECTION 72–2.02B ROCK.
2. PROVIDE TO THE AGENCY GRADATION TESTS AND SPECIFICATIONS OF THE PROPOSED RSP FOR APPROVAL PRIOR TO PURCHASE.
3. ALL SUBDRAINAGE PIPING AND FITTINGS WILL BE SOLVENT WELD BELLED END SCHEDULE 40 PVC MEETING ASTM D1785 AND ASTM D2672. PROVIDE TO THE AGENCY SPECIFICATIONS OF THE PROPOSED PVC PIPE FOR APPROVAL PRIOR TO PURCHASE.
4. PVC PIPE LOCATED WITHIN THE EXTENDED DRAINAGE TOE WILL BE PERFORATED WITH WITH TWO ROWS OF ⅜ TO ½ INCH HOLES SPACED BETWEEN 4 TO 6 INCHES APART. PVC PIPE LOCATED THROUGH NEWLY PLACED EMBANKMENT WILL BE NON–PERFORATED PIPE.

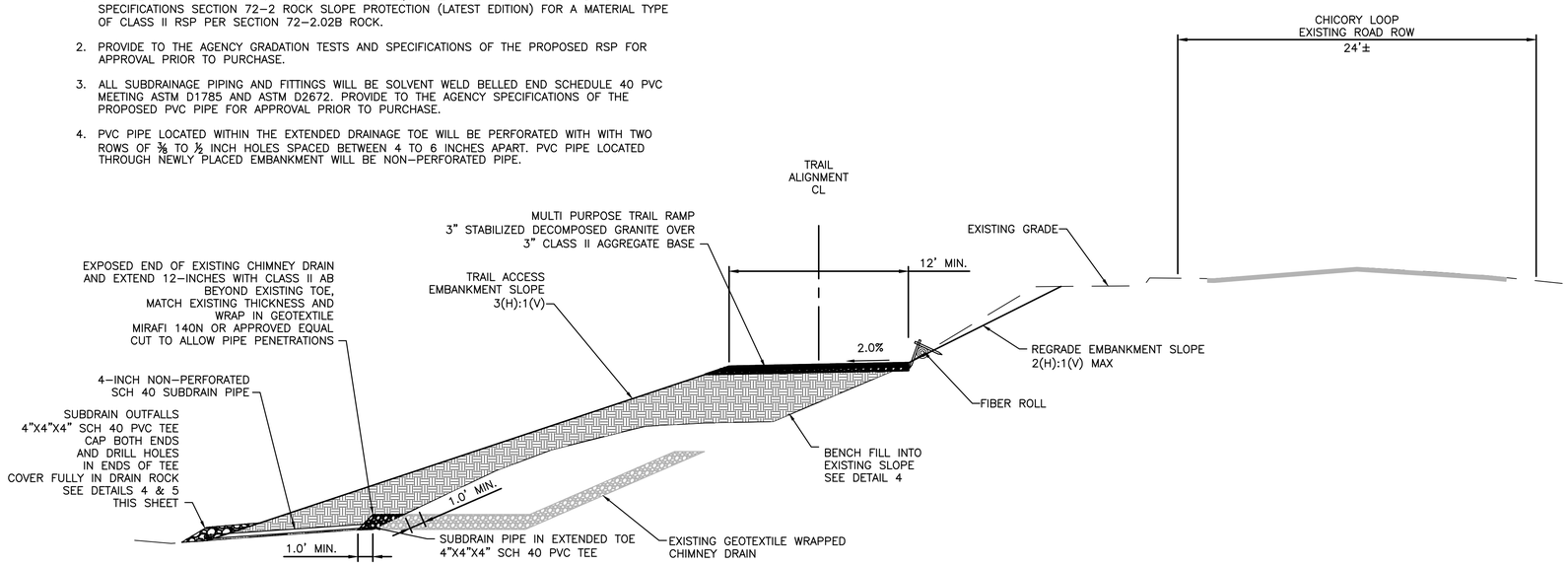

EQUESTRIAN TRAIL ACCESS RAMP TYPICAL SECTION

2 / –

1" = 5'

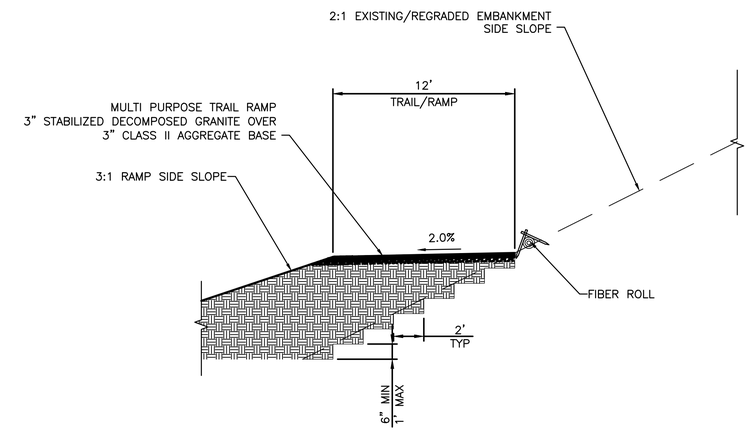

TYPICAL FILL BENCHIN DETAIL

4 / –

NTS

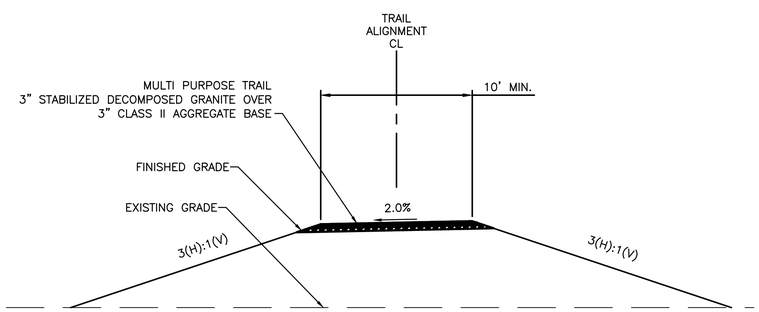

EQUESTRIAN TO TRAIL 4 TYPICAL SECTION

3 / –

1" = 5'

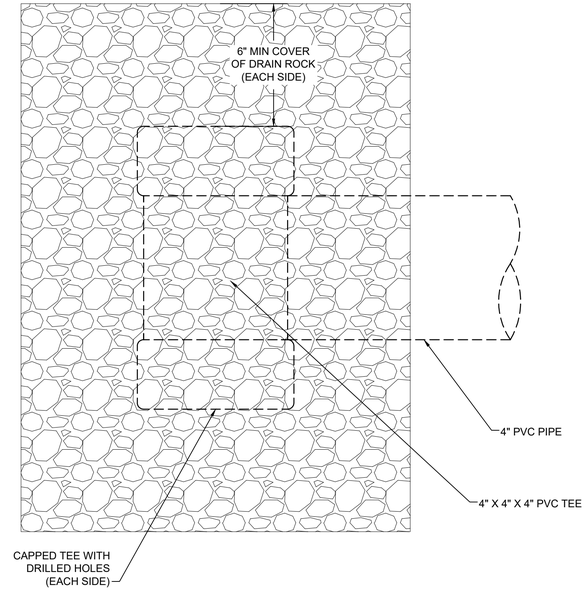

SUBDRAIN PIPE OUTFALL DETAIL – PLAN

5 / –

1" = 5'

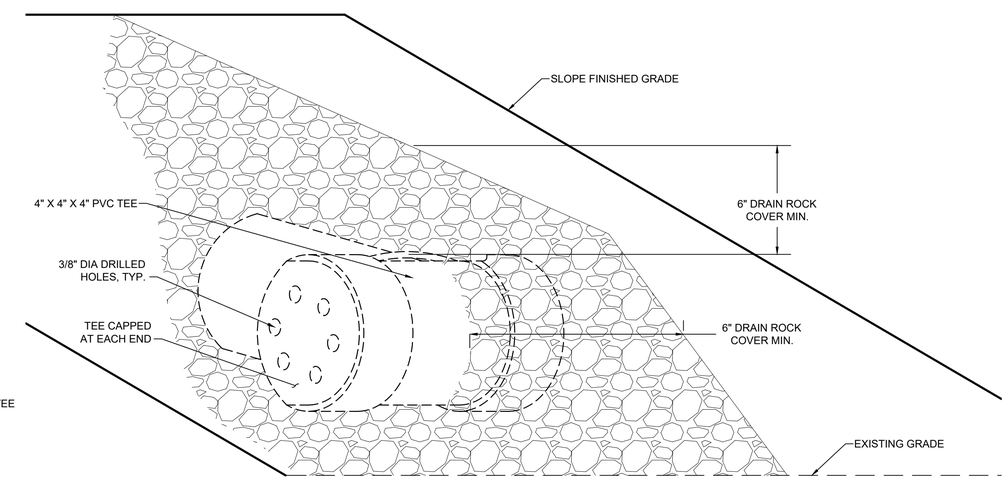

SUBDRAIN PIPE OUTFALL DETAIL

6 / –

1" = 5'

90% DESIGN

Issue No.	Description	Date	Drwn.	Chkd.	Resp. Engr.	Proj. Mgr.
–	–	–	–	–	–	–

HORIZONTAL DATUM IS THE CALIFORNIA COORDINATE SYSTEM, ZONE 2 (NAD 83)

VERTICAL DATUM IS NAVD 88

EL NAVD 88 =
EL NGVD 29+2.6'

HDR Engineering, Inc.

BAR LENGTH ON ORIGINAL DRAWING EQUALS ONE INCH. ADJUST SCALE ACCORDINGLY.

Project Manager: K. JAMESON
Designed: V. RUSSO
Designed: X
Checked: K. FELLOWS
Drawn: V. RUSSO

SACRAMENTO-SAN JOAQUIN DELTA CONSERVANCY
BEES LAKES HABITAT RESTORATION PROJECT

TRAIL DETAILS II

Date	Project No.	Drawing No.	Issue
NOVEMBER, 2023	3223–10358905	C-21	X
Scale: AS NOTED	File Name: C–21.DWG		

C:\PWWORKING\WEST01\D2918499\C-21.DWG
November 20, 2023

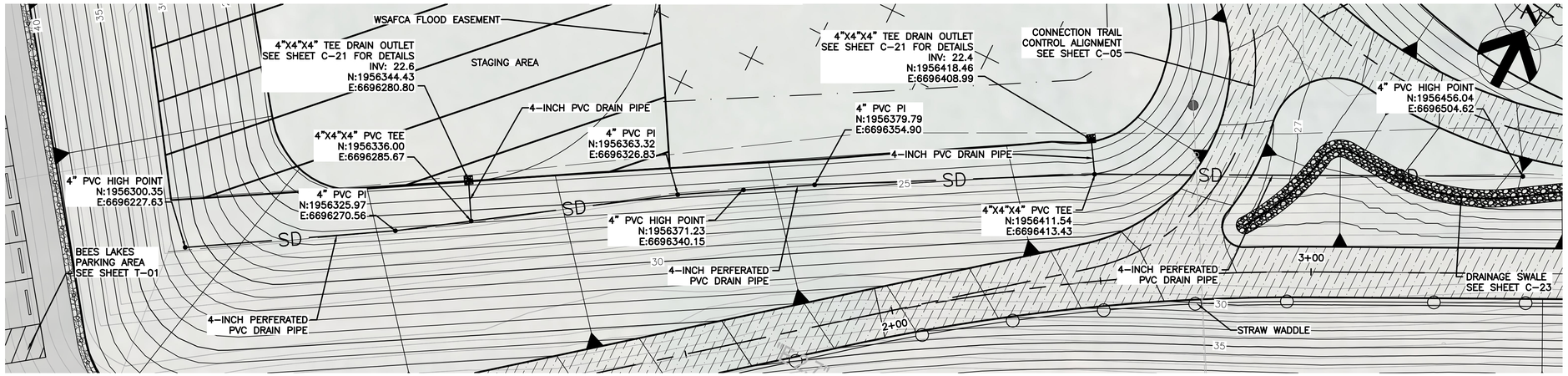

SOUTH ACCESS SUB DRAIN – PLAN

SCALE: 1" = 15'

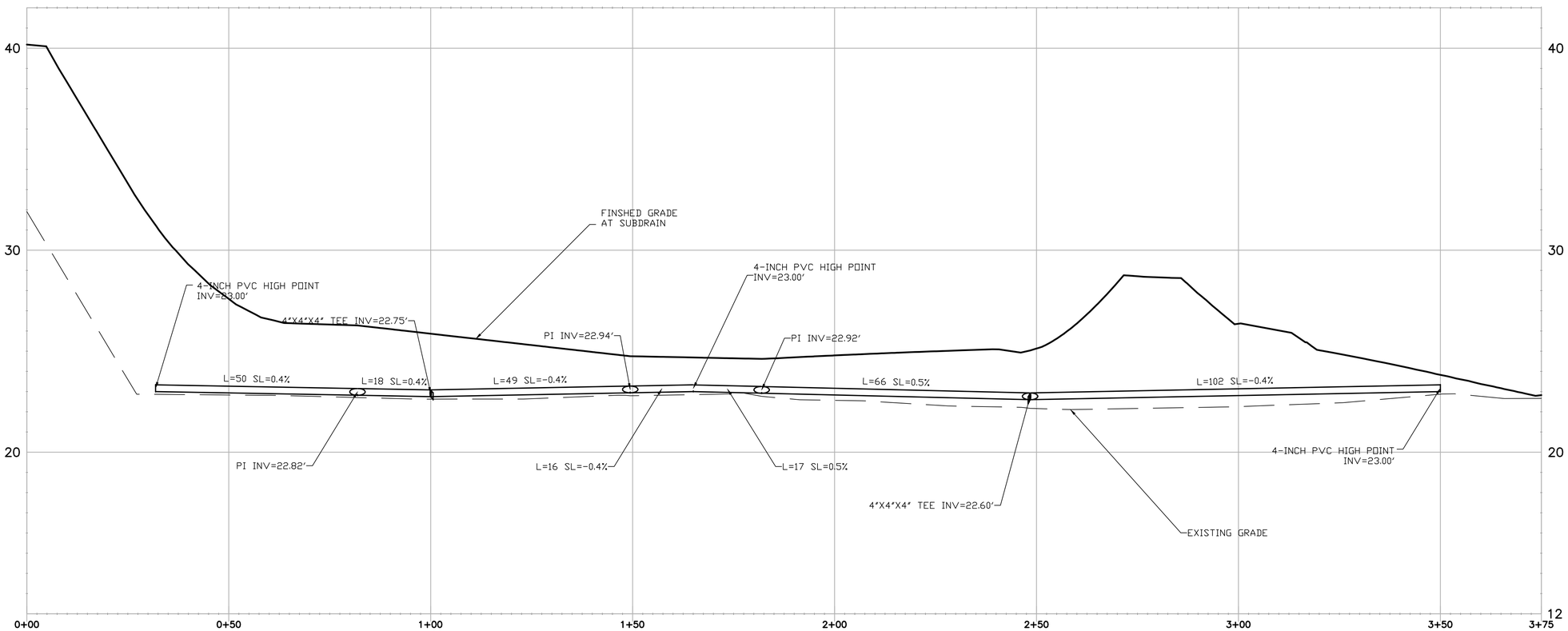

SOUTH ACCESS SUB DRAIN – PROFILE

SCALE: 1" = 15'

C:\PWWORKING\WEST01\D2918499\C-22.DWG
November 20, 2023

Issue No.	Description	Date	Drwn.	Chkd.	Resp. Engr.	Proj. Mgr.

HORIZONTAL DATUM IS THE CALIFORNIA COORDINATE SYSTEM, ZONE 2 (NAD 83)

VERTICAL DATUM IS NAVD 88

EL NAVD 88 =
EL NGVD 29+2.6'

HDR Engineering, Inc.

BAR LENGTH ON ORIGINAL DRAWING EQUALS ONE INCH. ADJUST SCALE ACCORDINGLY.

Project Manager: K. JAMESON
Designed: V. RUSSO
Designed: X
Checked: K. FELLOWS
Drawn: V. RUSSO

SACRAMENTO-SAN JOAQUIN DELTA CONSERVANCY
BEES LAKES HABITAT RESTORATION PROJECT

90% DESIGN

SUBDRAIN
PLAN AND PROFILE

Date	Project No.	Drawing No.	Issue
NOVEMBER, 2023	3223-10358905	C-22	X
Scale: 1" = 20'	File Name: C-22.dwg		

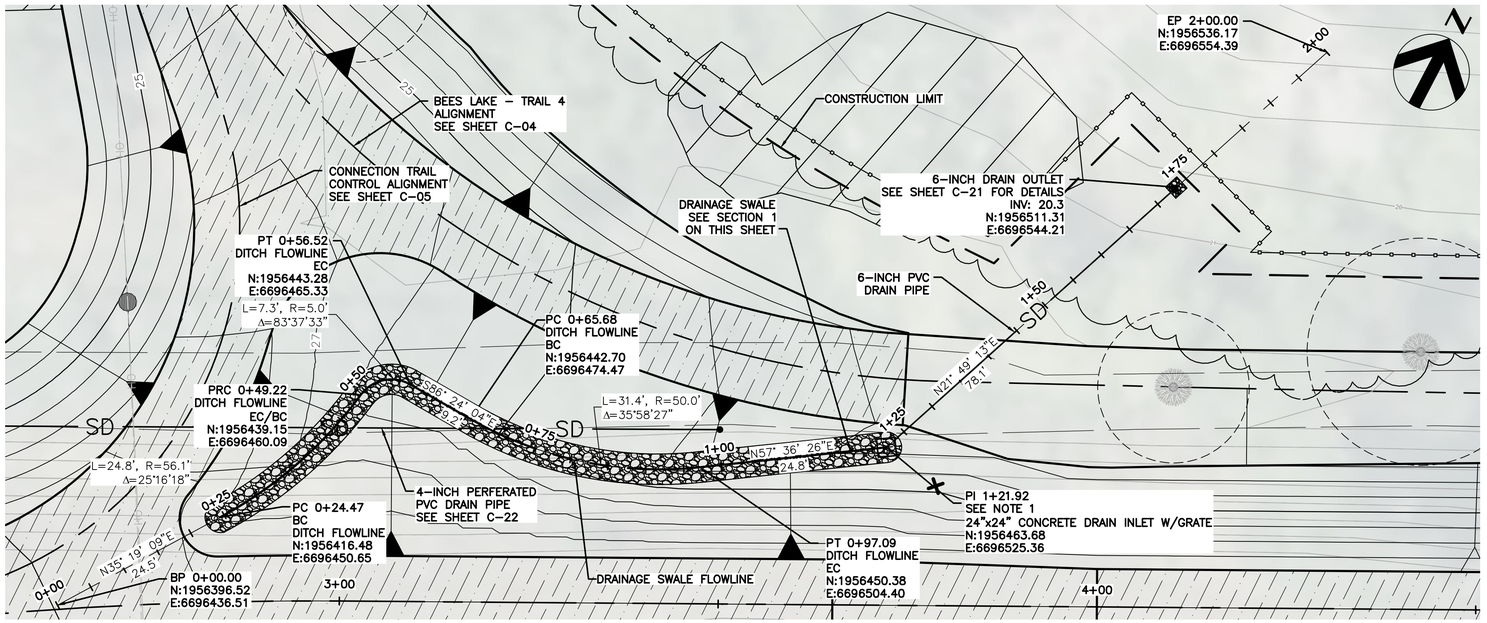

DRAINAGE SWALE – PLAN

SCALE: 1" = 10'

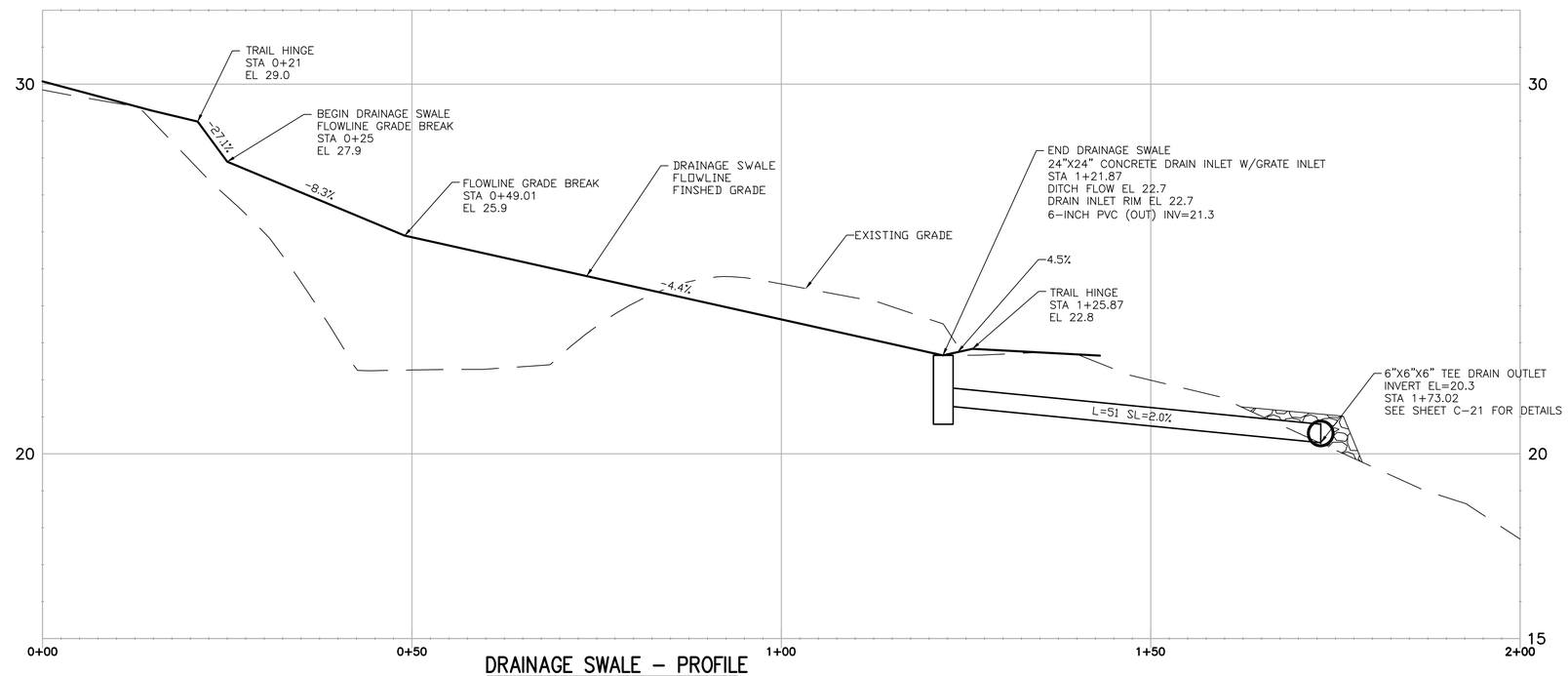

DRAINAGE SWALE – PROFILE

SCALE: HORIZ: 1" = 10' VERT: 1"=5'

NOTES:

1. CONTRACTOR TO SUBMIT TO THE AGENCY, PRODUCT SPECIFICATIONS AND SHOP DRAWINGS FOR A PRECAST 24"X24" CONCRETE DRAIN INLET FOR APPROVAL. DRAIN INLET SHALL HAVE KNOCKS OUTS THAT ACCEPT 6–INCH DIA. PVC PIPE AND INCLUDE A STEEL GRATE THAT BOLTS DOWN TO FRAME.

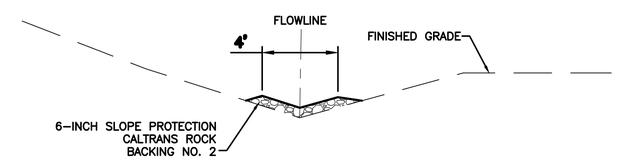

SECTION 1 – DRAINAGE SWALE

NTS

1 / –

90% DESIGN

Issue No.	Description	Date	Drwn.	Chkd.	Resp. Engr.	Proj. Mgr.

HORIZONTAL DATUM IS THE CALIFORNIA COORDINATE SYSTEM, ZONE 2 (NAD 83)

VERTICAL DATUM IS NAVD 88

EL NAVD 88 =
EL NGVD 29+2.6'

HDR Engineering, Inc.

BAR LENGTH ON ORIGINAL DRAWING EQUALS ONE INCH. ADJUST SCALE ACCORDINGLY.

Project Manager: K. JAMESON
Designed: V. RUSSO
Designed: X
Checked: K. FELLOWS
Drawn: V. RUSSO

SACRAMENTO-SAN JOAQUIN DELTA CONSERVANCY
BEES LAKES HABITAT RESTORATION PROJECT

DRAINAGE SWALE
PLAN, PROFILE, AND SECTION

Date	Project No.	Drawing No.	Issue
NOVEMBER, 2023	3223–10358905	C-23	X
Scale: 1" = 20'	File Name: C–23.dwg		

C:\PWWORKING\WEST01\D2918499\C-23.DWG
November 20, 2023

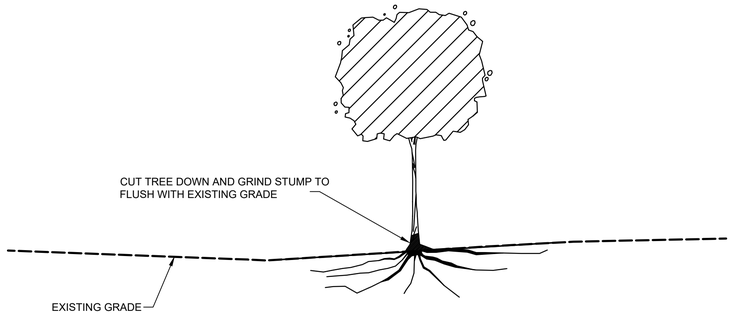

TREE AND STUMPBALL REMOVAL DETAIL 1

1 / –

NTS

NOTES:

1. ESA FENCING IS SHOWN OFFSET FROM THE CONSTRUCTION LIMIT IN THE PLAN VIEW SHEETS FOR VISUAL PURPOSE ONLY. ESA FENCE TO BE PLACE AT THE CONSTRUCTION LIMIT AS SHOWN IN THE DETAIL BELOW.

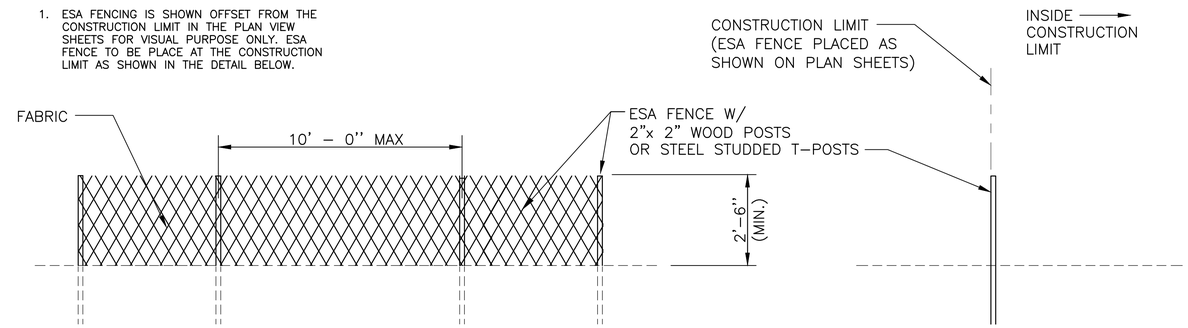

ENVIRONMENTAL SENSITIVE AREA (ESA) FENCE DETAIL 1

3 / –

NTS

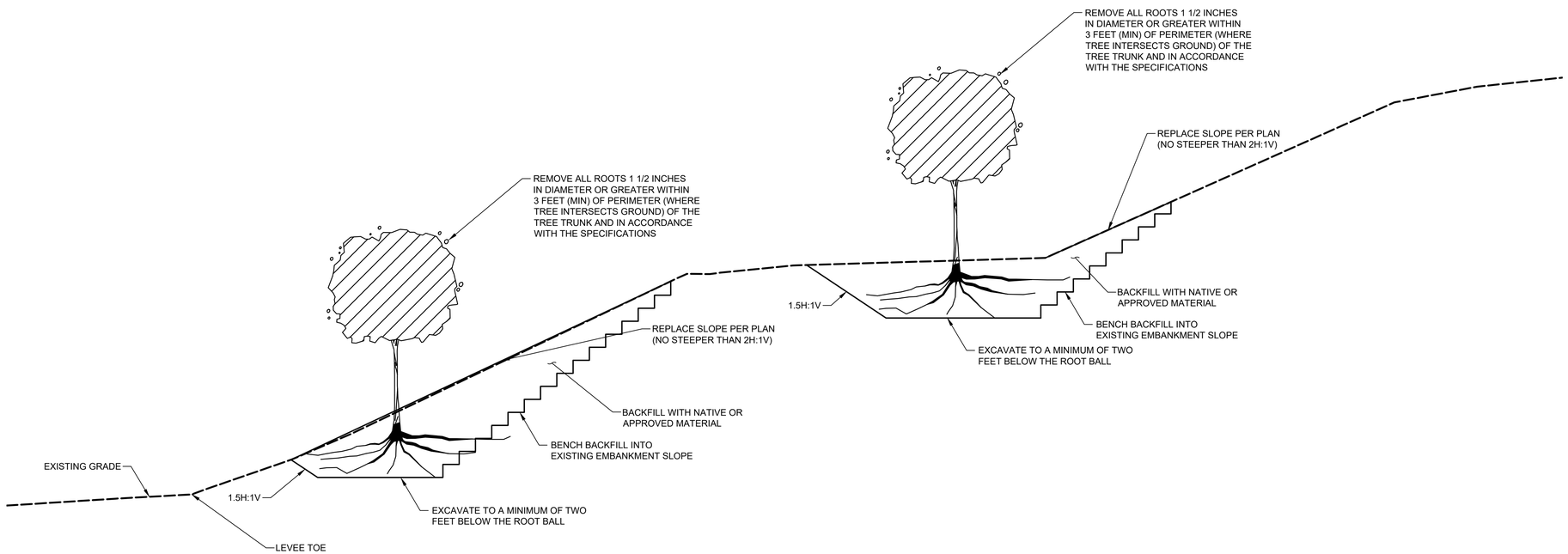

TREE AND STUMPBALL REMOVAL DETAIL 2

2 / –

NTS

C:\PWWORKING\WEST01\D2918499\C-24.DWG
November 20, 2023

Issue No.	Description	Date	Drwn.	Chkd.	Resp. Engr.	Proj. Mgr.
–	–	–	–	–	–	–

HORIZONTAL DATUM IS THE CALIFORNIA COORDINATE SYSTEM, ZONE 2 (NAD 83)

VERTICAL DATUM IS NAVD 88

EL NAVD 88 =
EL NGVD 29+2.6'

HDR Engineering, Inc.

BAR LENGTH ON ORIGINAL DRAWING EQUALS ONE INCH. ADJUST SCALE ACCORDINGLY.

Project Manager: K. JAMESON
Designed: V. RUSSO
Designed: X
Checked: K. FELLOWS
Drawn: V. RUSSO

SACRAMENTO-SAN JOAQUIN DELTA CONSERVANCY
BEES LAKES HABITAT RESTORATION PROJECT

90% DESIGN

TREE REMOVAL AND ESA FENCE DETAILS

Date	Project No.	Drawing No.	Issue
NOVEMBER, 2023	3223–10358905	C-24	X
Scale: AS NOTED	File Name: C–24.dwg		

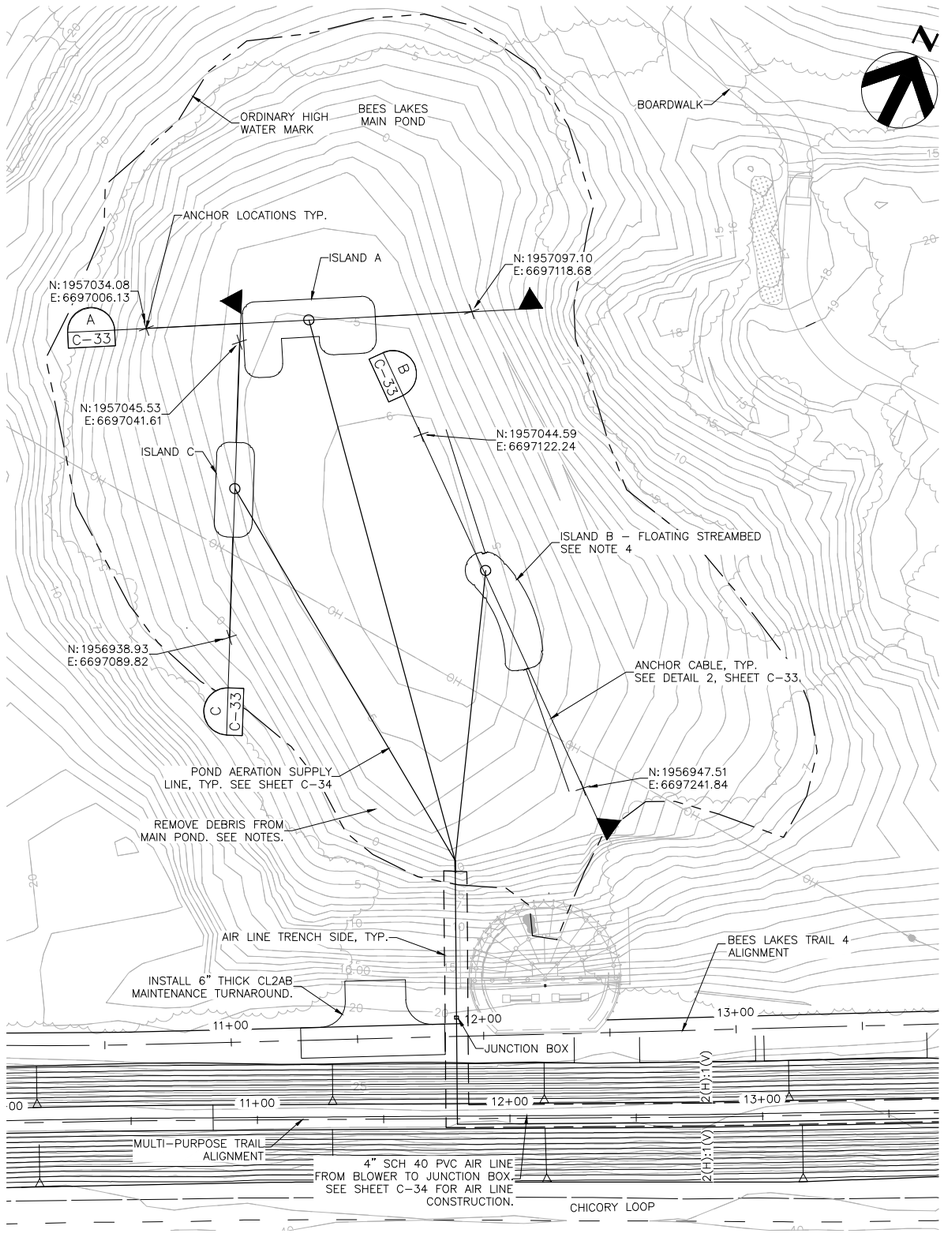

FLOATING ISLAND SITE PLAN

SCALE: 1" = 30'

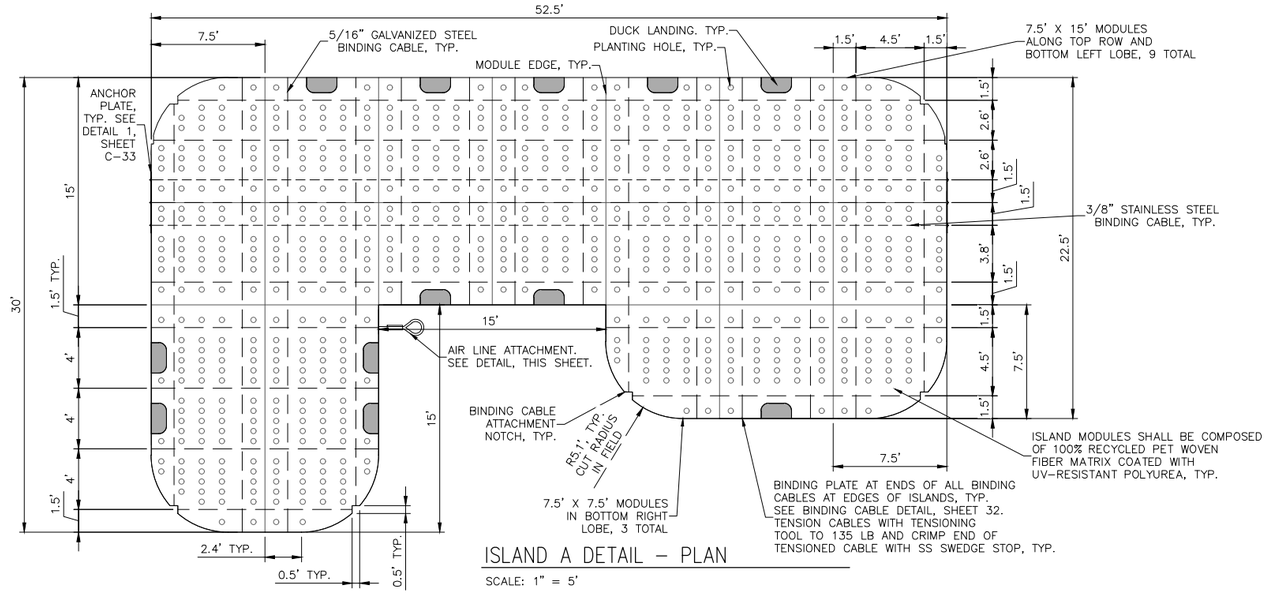

ISLAND A DETAIL – PLAN

SCALE: 1" = 5'

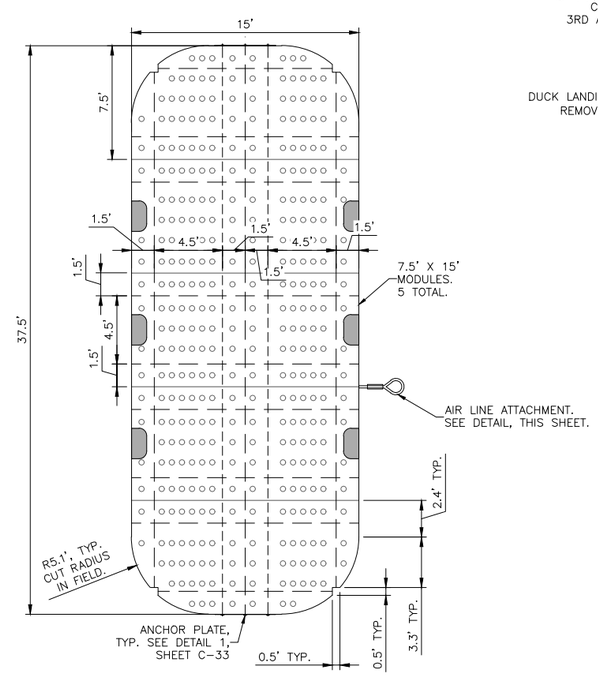

ISLAND C DETAIL – PLAN

SCALE: 1" = 5'

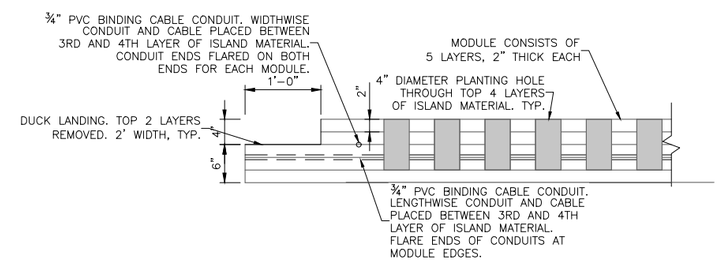

ISLAND A & B DETAIL – SECTION

SCALE: 1" = 1'

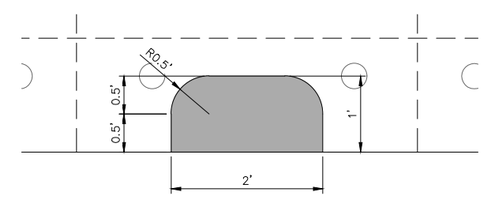

DUCK LANDING DETAIL – PLAN

SCALE: 1" = 1'

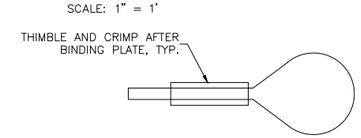

AIR LINE ATTACHMENT DETAIL

SCALE: 1" = 1'

POND DEBRIS REMOVAL NOTES:

1. PRIOR TO ASSEMBLING AND INSTALLING FLOATING ISLANDS, FLOATING STREAMBED, AERATION LINES AND ANCHORS, REMOVE DEBRIS FROM MAIN POND. ACCESS FOR DEBRIS REMOVAL IS LIMITED TO THE SOUTH SIDE OF THE POND. DO NOT DAMAGE OR CUT LIVE VEGETATION ON THE BANKS.
2. PROTECT EXISTING BANK VEGETATION AT ACCESS POINTS AND RESTORE DISTURBED AREAS.
3. DISPOSE OF DEBRIS REMOVED FROM THE POND LEGALLY OFFSITE.
4. FLOATING ISLANDS SHALL BE MANUFACTURED AND ASSEMBLED BY FLOATING ISLANDS WEST, OR APPROVED EQUIVALENT.

Issue No.	Description	Date	Drwn.	Chkd.	Resp. Engr.	Proj. Mgr.

HORIZONTAL DATUM IS THE CALIFORNIA COORDINATE SYSTEM, ZONE 2 (NAD 83)

VERTICAL DATUM IS NAVD 88

EL NAVD 88 = EL NGVD 29+2.6'

cbec eco engineering

BAR LENGTH ON ORIGINAL DRAWING EQUALS ONE INCH. ADJUST SCALE ACCORDINGLY.

Project Manager: D. BROWN
Designed: S. DIAZ
Designed:
Checked: C. BOWLES
Drawn: J. INGRAM

SACRAMENTO-SAN JOAQUIN DELTA CONSERVANCY
BEES LAKES HABITAT RESTORATION PROJECT

90% DESIGN

BEES LAKES FLOATING ISLAND SITE PLAN & DETAILS

Date	Project No.	Drawing No.	Issue
DECEMBER 2023	23-1005	C-31	X
Scale: AS NOTED	File Name: SITE PLAN & DETAILS.DWG		

PRODUCTION\SITE PLAN & DETAILS.DWG
05/07/20

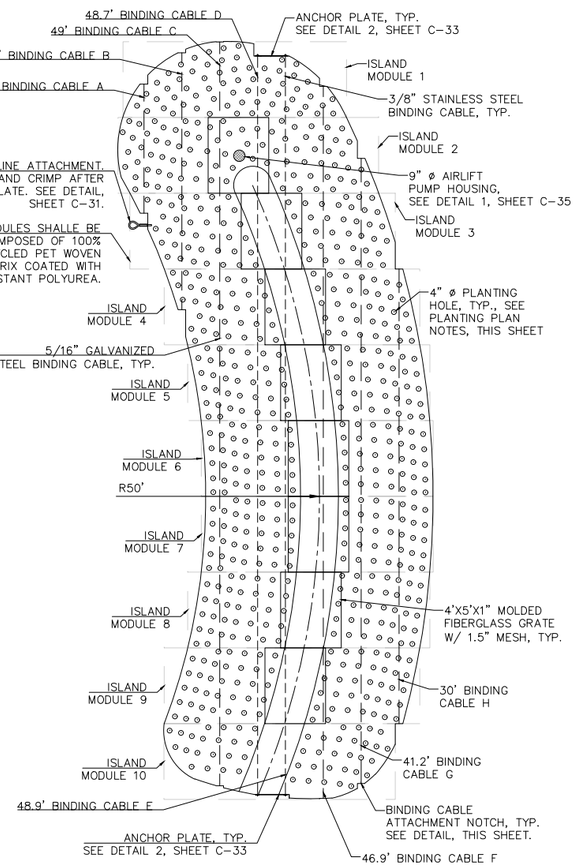

ISLAND B FLOATING STREAMBED DETAIL – PLAN

SCALE: 1" = 5'

PLANTING PLAN NOTES:

1. PLANTING HOLES SHALL BE CENTERED ON AND LOCATED ALONG PLANTING LINES AT DESIGNATED SPACING.
2. THE INTERIOR PLANTING HOLE LINE SHALL BE OFFSET 0.5' FROM STREAM CHANNEL EDGES. THE NEXT 3 PLANTING HOLE LINES ARE OFFSET 1' AWAY FROM THE CHANNEL AND EACH OTHER. THE OUTER 3 PLANTING LINES SHALL BE OFFSET 9 INCHES AWAY FROM THE FOURTH LINE AND EACH OTHER.
3. PLANTING HOLES SHALL BE 4" DIAMETER. CUT PLANTING HOLES 1' ON CENTER ALONG PLANTING LINES.

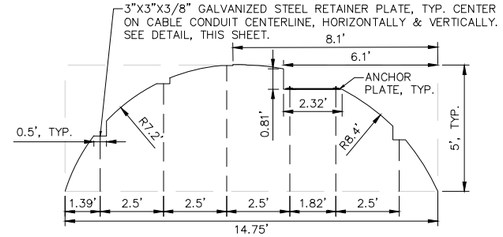

PLAN VIEW – ISLAND MODULE 1

SCALE: 1" = 3'

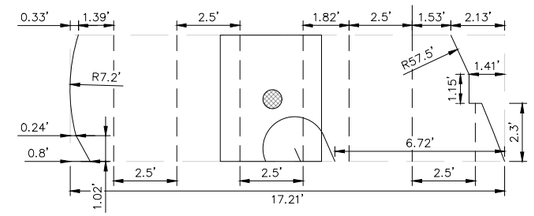

PLAN VIEW – ISLAND MODULE 2

SCALE: 1" = 3'

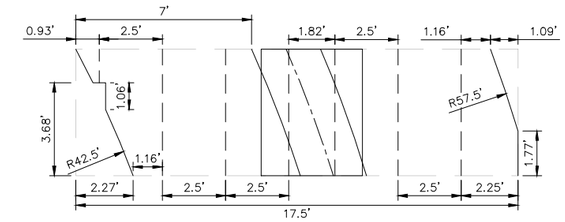

PLAN VIEW – ISLAND MODULE 3

SCALE: 1" = 3'

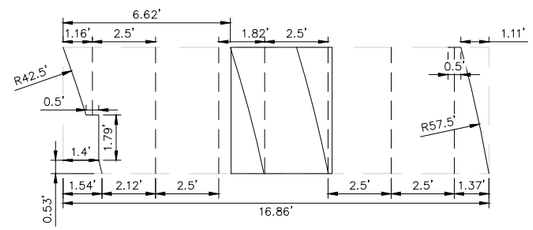

PLAN VIEW – ISLAND MODULE 4

SCALE: 1" = 3'

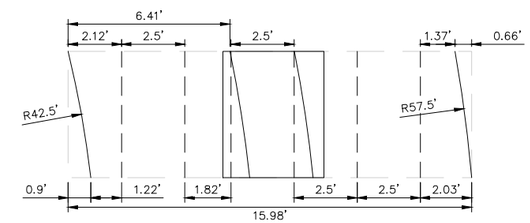

PLAN VIEW – ISLAND MODULE 5

SCALE: 1" = 3'

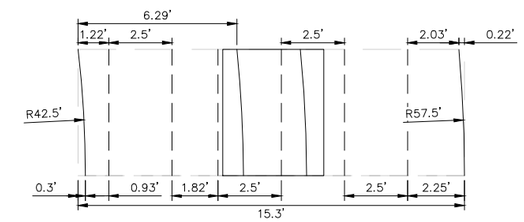

PLAN VIEW – ISLAND MODULE 6

SCALE: 1" = 3'

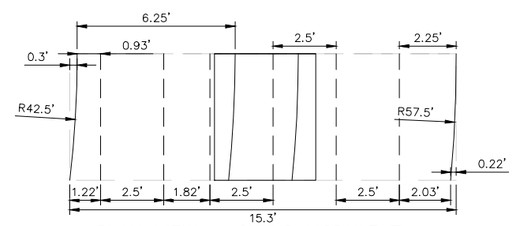

PLAN VIEW – ISLAND MODULE 7

SCALE: 1" = 3'

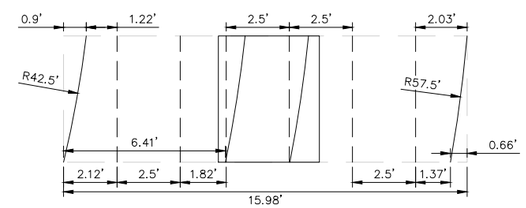

PLAN VIEW – ISLAND MODULE 8

SCALE: 1" = 3'

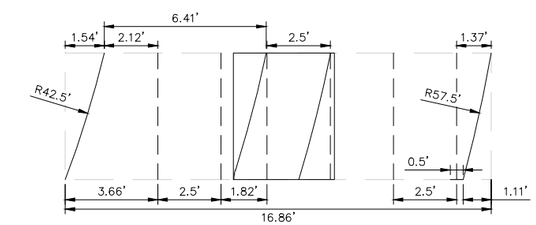

PLAN VIEW – ISLAND MODULE 9

SCALE: 1" = 3'

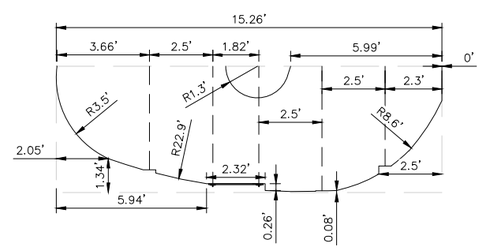

PLAN VIEW – ISLAND MODULE 10

SCALE: 1" = 3'

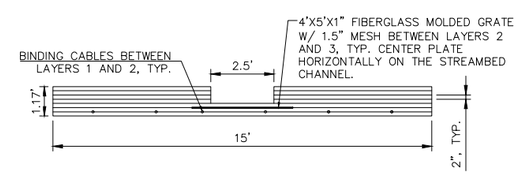

FLOATING STREAMBED – SECTION

SCALE: 1" = 3'

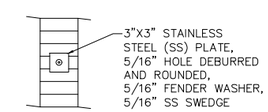

BINDING CABLE ATTACHMENT NOTCH DETAIL

SCALE: 1" = 1'

PRODUCTION\SITE PLAN & DETAILS.DWG
05/07/20

Issue No.	Description	Date	Drwn.	Chkd.	Resp. Engr.	Proj. Mgr.

HORIZONTAL DATUM IS THE CALIFORNIA COORDINATE SYSTEM, ZONE 2 (NAD 83)

VERTICAL DATUM IS NAVD 88

EL NAVD 88 = EL NGVD 29+2.6'

cbec eco engineering

BAR LENGTH ON ORIGINAL DRAWING EQUALS ONE INCH. ADJUST SCALE ACCORDINGLY.

Project Manager: D. BROWN
Designed: S. DIAZ
Designed: G. O'TOOLE
Checked: C. BOWLES
Drawn: J. INGRAM

SACRAMENTO-SAN JOAQUIN DELTA CONSERVANCY
BEES LAKES HABITAT RESTORATION PROJECT

90% DESIGN

BEES LAKES FLOATING STREAMBED SITE PLAN & DETAILS

Date	Project No.	Drawing No.	Issue
DECEMBER 2023	23-1005	C-32	X
Scale: AS NOTED	File Name: FLOATING_STREAMBED.DWG		

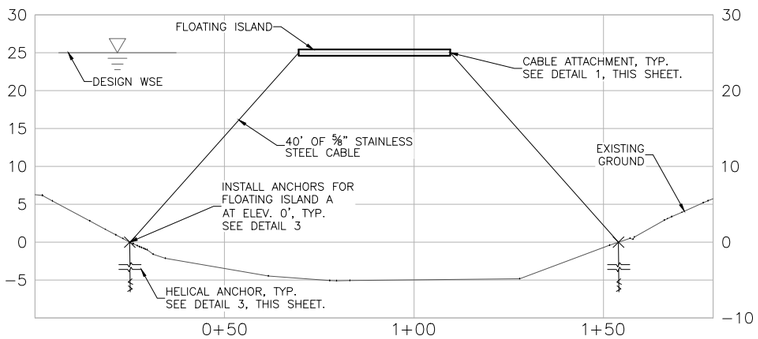

FLOATING ISLAND A – SECTION

SCALE: 1" = 20'

A / C-31

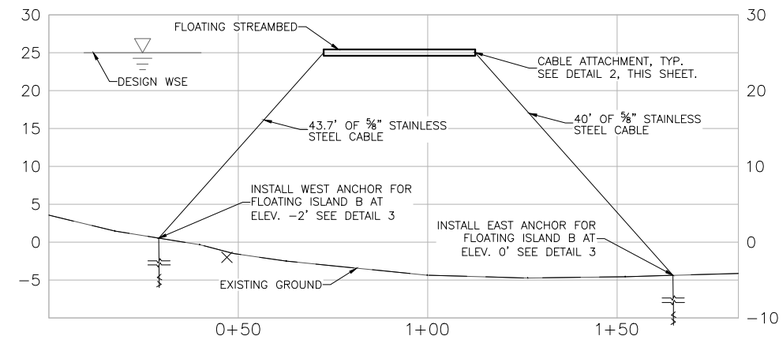

FLOATING STREAMBED B – SECTION

SCALE: 1" = 20'

B / C-31

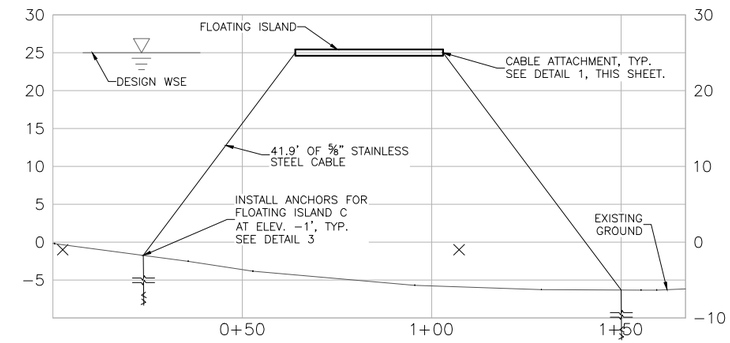

FLOATING ISLAND C – SECTION

SCALE: 1" = 20'

C / C-31

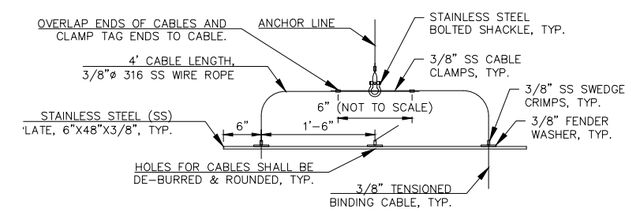

PLAN VIEW

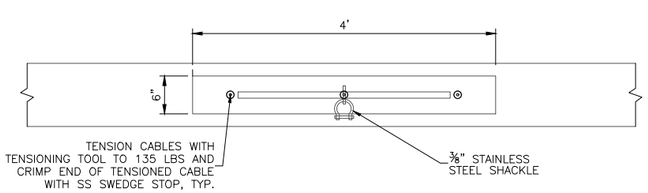

ELEVATION VIEW

FLOATING ISLANDS A & C ANCHOR PLATE

SCALE: 1" = 1'

1 / –

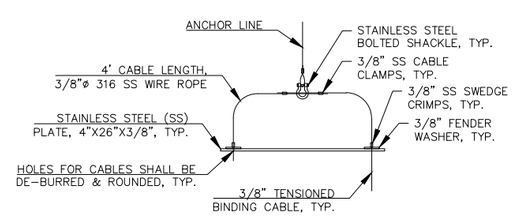

PLAN VIEW

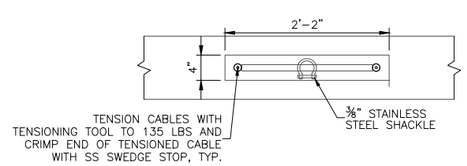

ELEVATION VIEW

FLOATING STREAMBED ANCHOR PLATE

SCALE: 1" = 1'

2 / –

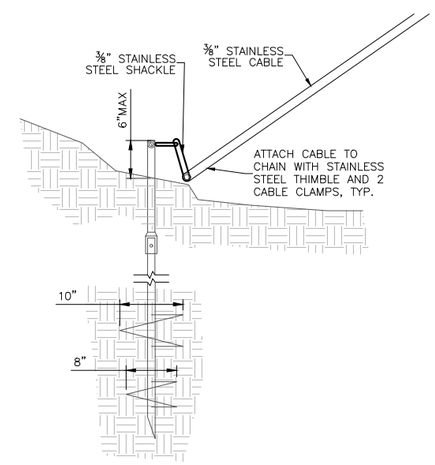

NOTE:

1. HELICAL ANCHORS & EXTENSIONS AS REQUIRED TO ACHIEVE MINIMUM INSTALLATION TORQUE OF 5000 FT–LBS IN BEARING SOILS. DEPTH TO SUITABLE BEARING SOILS MAY VARY AND SHALL BE DETERMINED AT TIME OF INSTALLATION
2. ALL HELICAL ANCHORS SHALL BE INSTALLED BY A QUALIFIED INSTALLER
3. ALL HELICAL ANCHORS & CONNECTING HARDWARE SHALL BE HOT DIPPED GALVANIZED.
4. ALL ANCHORS ARE TO BE INSTALLED NO MORE THAN 5 DEGREES FROM A VERTICAL ORIENTATION.
5. HELICAL ANCHOR INSTALLATION SHALL ADVANCE AT A RATE OF 3" PER REVOLUTION AT A MAXIMUM ANGULAR RATE OF 20 REVOLUTIONS PER MINUTE; TO WITHIN MANUFACTURERS TOLERANCES.
6. THE HELICAL ANCHOR INSTALLER SHALL CONTINUOUSLY MEASURE TORQUE UTILIZING A PRE–APPROVED METHOD AND PROVIDE CURRENT CALIBRATION CERTIFICATION DATA FOR ALL TORQUE MONITORING EQUIPMENT.
7. ALL HELICAL ANCHOR PILES AND TIE–BACKS SHALL BE INSTALLED TO A MINIMUM TORQUE OF 5000 FT–LBS

FLOATING ISLAND & STREAMBED HELICAL ANCHOR

SCALE: 1" = 1'

3 / –

PRODUCTION\ANCHORING PLAN.DWG
5/7/20

Issue No.	Description	Date	Drwn.	Chkd.	Resp. Engr.	Proj. Mgr.

HORIZONTAL DATUM IS THE CALIFORNIA COORDINATE SYSTEM, ZONE 2 (NAD 83)

VERTICAL DATUM IS NAVD 88

EL NAVD 88 =
EL NGVD 29+2.6'

cbec eco engineering

BAR LENGTH ON ORIGINAL DRAWING EQUALS ONE INCH. ADJUST SCALE ACCORDINGLY.

Project Manager: D. BROWN
Designed: S. DIAZ
Designed:
Checked: C. BOWLES
Drawn: J. INGRAM

SACRAMENTO-SAN JOAQUIN DELTA CONSERVANCY
BEES LAKES HABITAT RESTORATION PROJECT

90% DESIGN

FLOATING ISLAND ANCHORING PLAN

Date	Project No.	Drawing No.	Issue
DECEMBER 2023	23–1005	C-33	X
Scale: AS NOTED	File Name: ANCHORING PLAN.DWG		

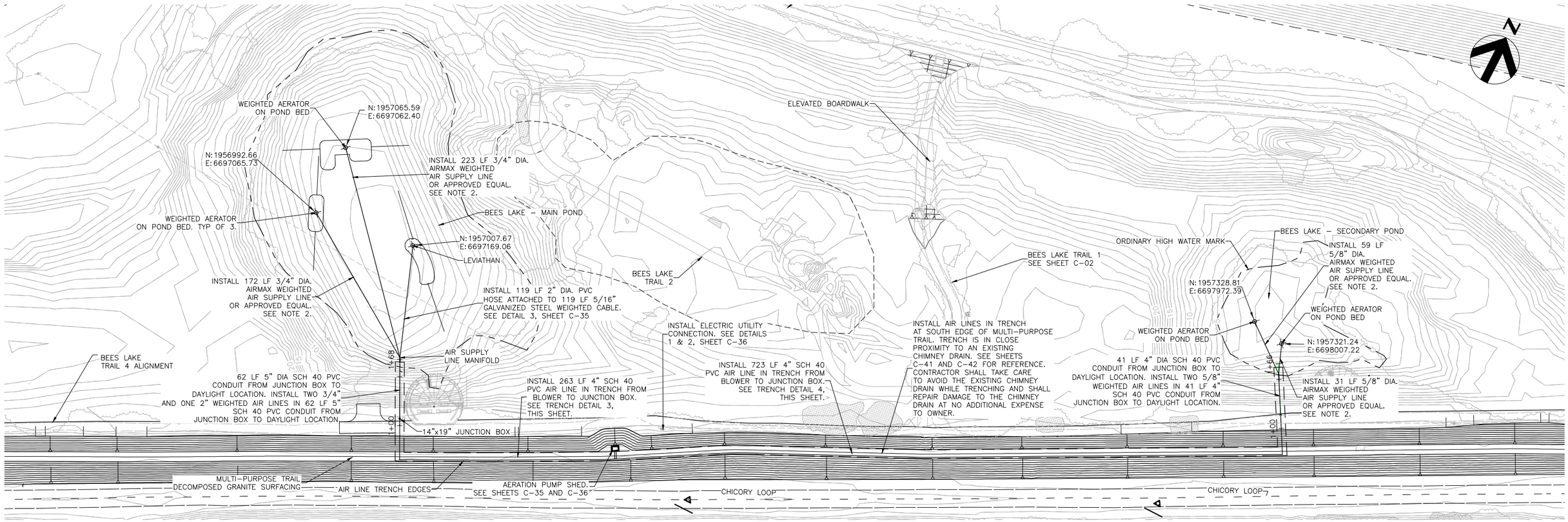

AERATOR SYSTEM DETAIL

SCALE: 1" = 50'

NOTES:

1. INSTALL ALL PVC AIR LINES IN TRENCH FROM PUMP TO JUNCTION BOX.
2. INSTALL AIR LINE IN TRENCH FROM JUNCTION BOX TO POND MANIFOLD, LOCATIONS SHOWN ON PLANS. LAY WEIGHTED AIR LINE IN 4" PVC FROM MANIFOLD TO DAYLIGHT. LAY WEIGHTED AIR LINE IN 4" PVC FROM DAYLIGHT TO AERATOR LOCATIONS ON POND BOTTOM.

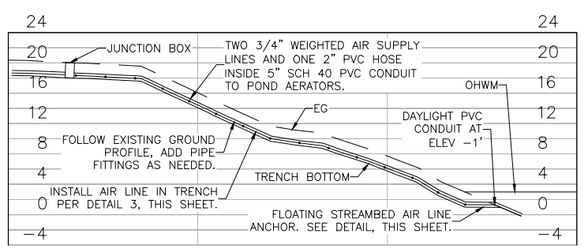

MAIN POND AIRLINE PROFILE: JUNCTION BOX TO DAYLIGHT

SCALE: 1" = 10'

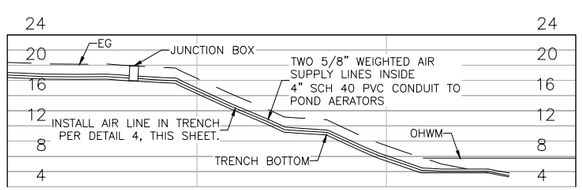

SECONDARY POND AIRLINE PROFILE: JUNCTION BOX TO DAYLIGHT

SCALE: 1" = 10'

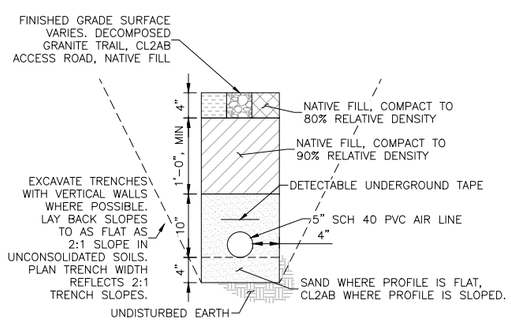

AIR LINE TRENCH DETAIL–MAIN POND

3

SCALE: 1" = 1'

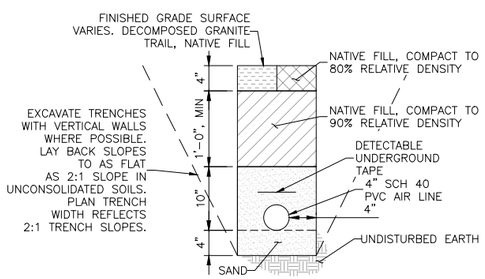

AIR LINE TRENCH DETAIL–SECONDARY POND

4

SCALE: 1" = 1'

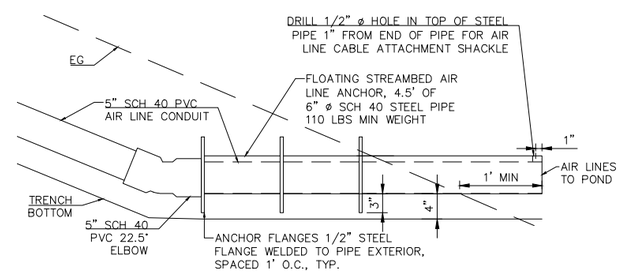

1. INSTALL 5" PVC AIR LINE CONDUIT INSIDE 6" STEEL PIPE AT BOTTOM OF AIR LINE TRENCH
2. COMPACT SOIL CAREFULLY AROUND PIPE AND AIR LINES TAKING CARE TO FILL PIPE HAUNCHES AND TO COMPACT SOIL COMPLETELY AROUND ANCHOR FLANGES

FLOATING STREAMBED AIR LINE ANCHOR DETAIL

5

SCALE: 1" = 2'

90% DESIGN

Issue No.	Description	Date	Drwn.	Chkd.	Resp. Engr.	Proj. Mgr.

HORIZONTAL DATUM IS THE CALIFORNIA COORDINATE SYSTEM, ZONE 2 (NAD 83)

VERTICAL DATUM IS NAVD 88

EL NAVD 88 =
EL NGVD 29+2.6'

cbec eco engineering

BAR LENGTH ON ORIGINAL DRAWING EQUALS ONE INCH. ADJUST SCALE ACCORDINGLY.

Project Manager: D. BROWN
Designed: S. DIAZ
Designed: G. O'TOOLE
Checked: C. BOWLES
Drawn: J. INGRAM

SACRAMENTO-SAN JOAQUIN DELTA CONSERVANCY
BEES LAKES HABITAT RESTORATION PROJECT

POND AERATION PLAN

Date	Project No.	Drawing No.	Issue
DECEMBER 2023	23-1005	C-34	X
Scale: AS NOTED	File Name: Aeration_Plan_Details.DWG		

XXXXXX\XXX.DWG
XX/XX/XX

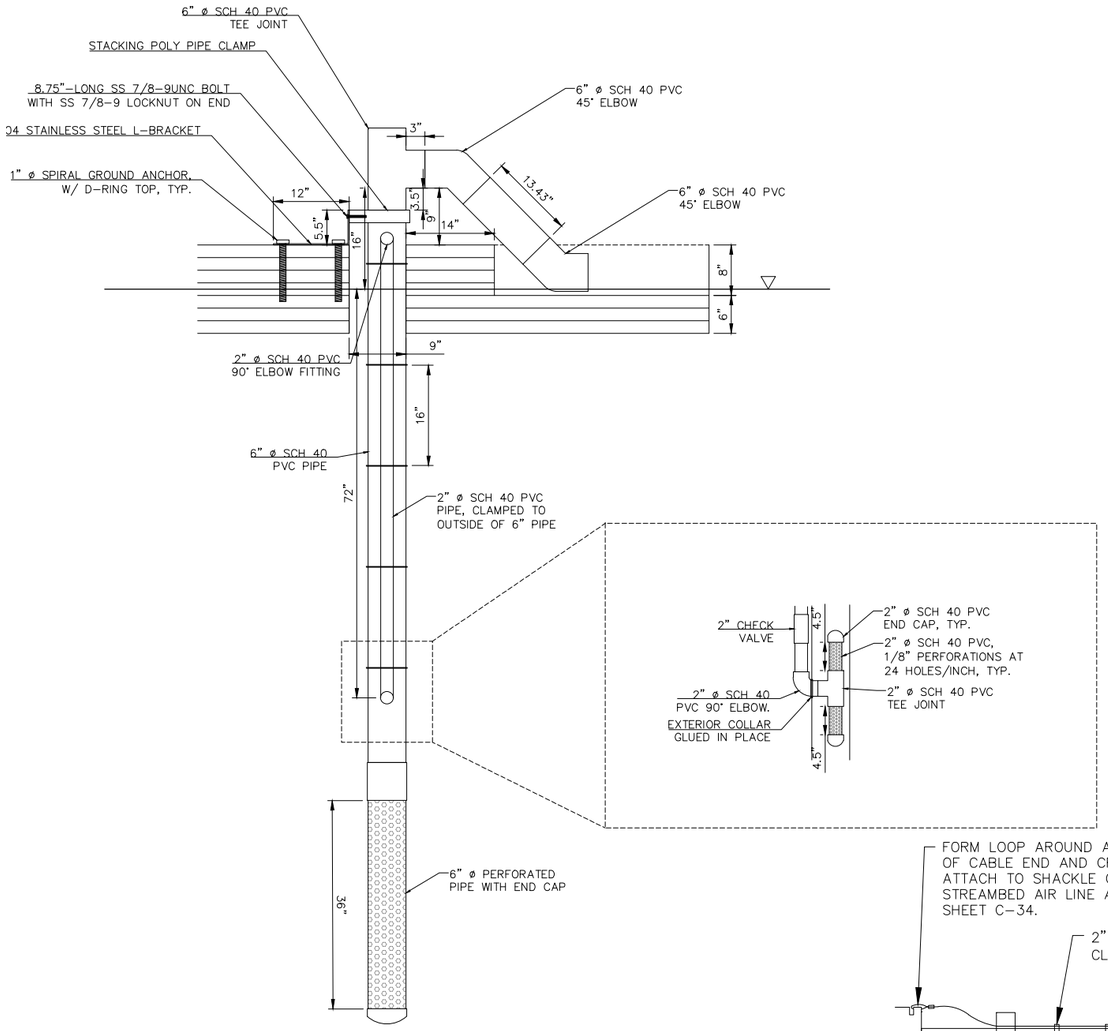

FLOATING STREAMBED – LEVIATHAN DETAIL (1)

SCALE: 1" = 1'

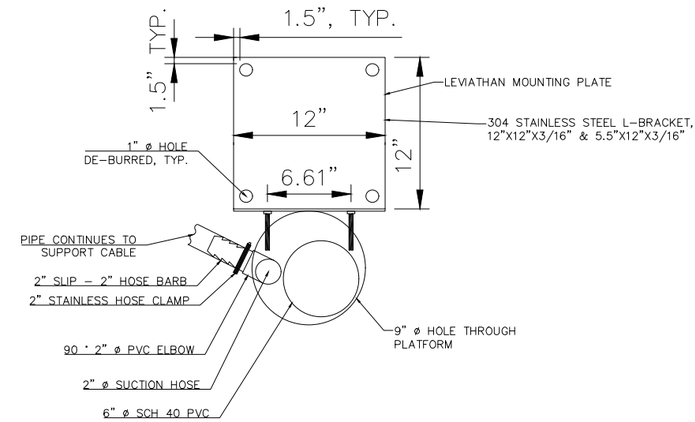

FLOATING STREAMBED – LEVIATHAN DETAIL (2)

SCALE: 1" = 6"

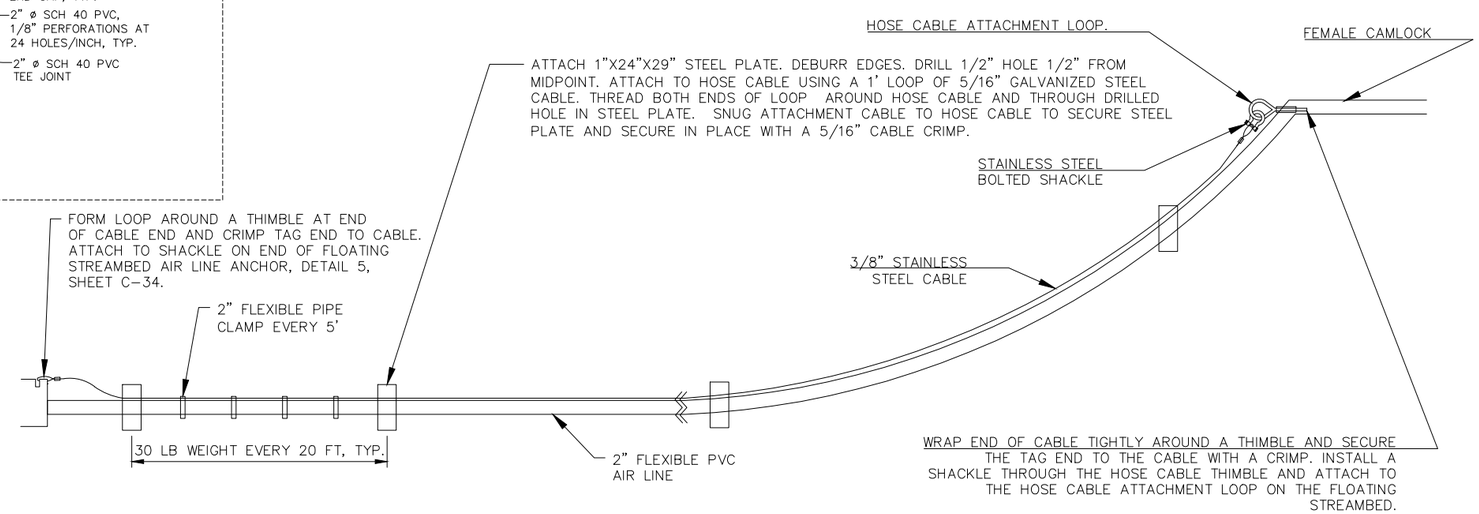

FLOATING STREAMBED AIR LINE ANCHOR CABLE WEIGHTING DETAIL (3)

SCALE: 1" = 6"

1. HOSE CABLE IS 160 LF $\frac{5}{16}$" GALVANIZED STEEL CABLE.

XXXXXXX\XXX.DWG
XX/XX/XX

Issue No.	Description	Date	Drwn.	Chkd.	Resp. Engr.	Proj. Mgr.

HORIZONTAL DATUM IS THE CALIFORNIA COORDINATE SYSTEM, ZONE 2 (NAD 83)

VERTICAL DATUM IS NAVD 88

EL NAVD 88 =
EL NGVD 29+2.6'

cbec eco engineering

BAR LENGTH ON ORIGINAL DRAWING EQUALS ONE INCH. ADJUST SCALE ACCORDINGLY.

Project Manager: D. BROWN
Designed: S. DIAZ
Designed: G. O'TOOLE
Checked: C. BOWLES
Drawn: J. INGRAM

SACRAMENTO-SAN JOAQUIN DELTA CONSERVANCY
BEES LAKES HABITAT RESTORATION PROJECT

90% DESIGN

AERATION DETAILS - POND

Date	Project No.	Drawing No.	Issue
DECEMBER 2023	23–1005	C-35	X
Scale: AS NOTED	File Name: Aeration_Plan_Details.DWG		

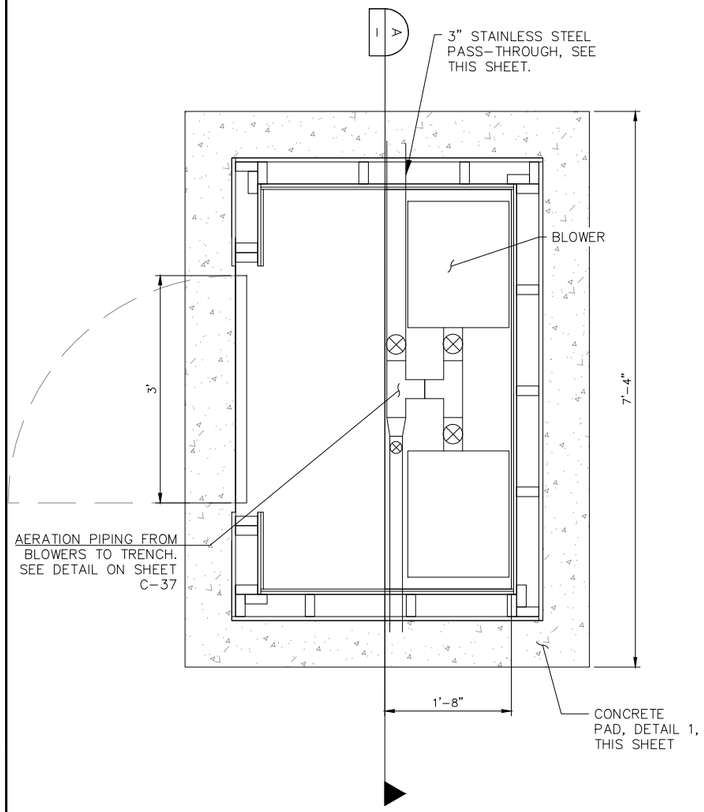

BEES LAKES – PUMP SHED SITE PLAN

SCALE: 1" = 1'

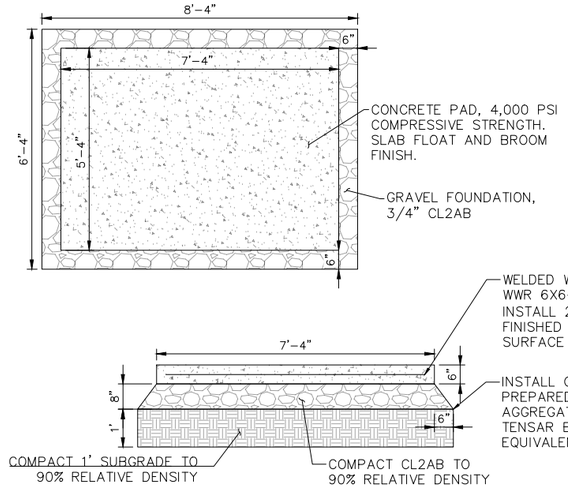

PUMP SHED – CONCRETE PAD DETAIL (1)

1" = 2'

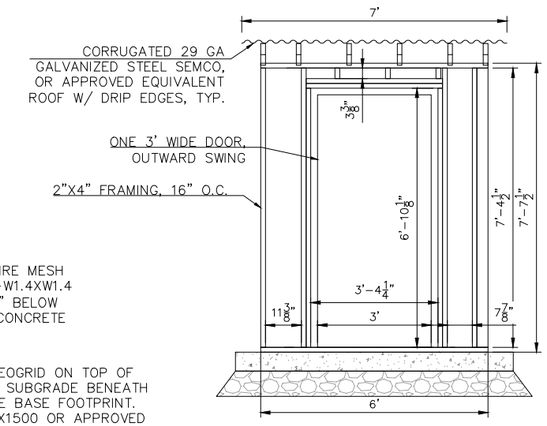

PUMP SHED – FRONT ELEVATION (2)

1" = 2'

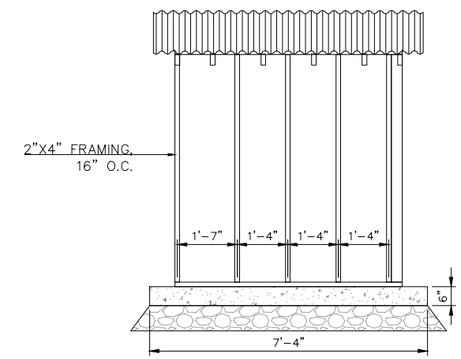

PUMP SHED – BACK ELEVATION (3)

1" = 2'

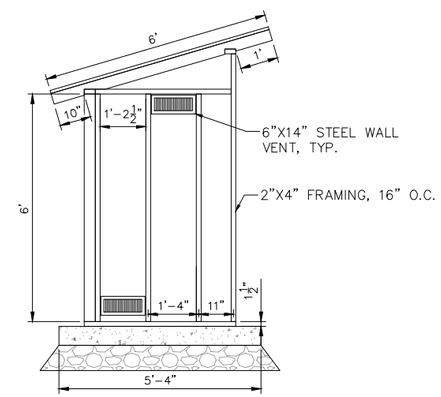

PUMP SHED – WEST ELEVATION (4)

1" = 2'

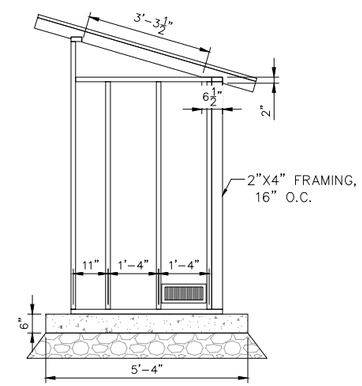

PUMP SHED – EAST ELEVATION (5)

1" = 2'

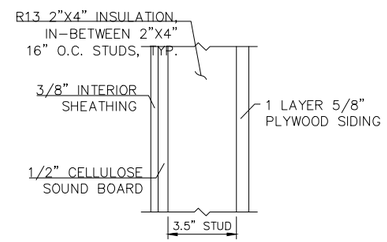

PUMP SHED – WALL SECTION (6)

1" = 2'

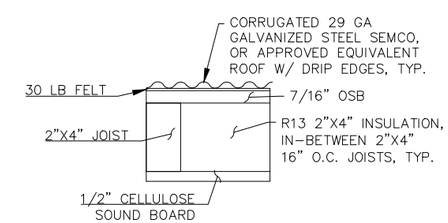

PUMP SHED – ROOF SECTION (7)

1" = 2'

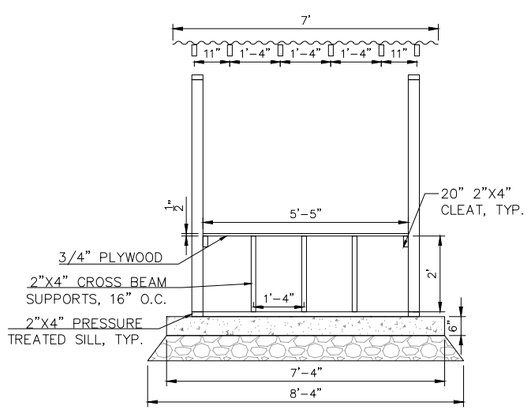

PUMP SHED – SECTION A

SCALE: 1" = 2'

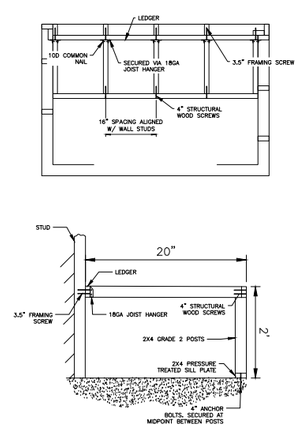

PUMP SHED – BLOWER TABLE

SCALE: 1" = 2'

NOTE:

1. GALVANIZED METAL CORRUGATED ROOF ON TOP OF 30# FELT ON 1/2" OSB NAILED TO ROOF JOISTS/RAFTERS.
2. TOP OR BOTTOM PLATE TO STUDS: 4-8D BOX (21/2" × 0.113") [TOE NAIL].
3. STUD TO STUD: 16D COMMON (31/2" × 0.162") AT 16" O.C. FACE NAIL.
4. CONTINUOUS HEADER TO STUD: 5-8D BOX (21/2" × 0.113") [TOE NAIL].
5. RAFTER OR ROOF TRUSS TO PLATE: 3-16D BOX NAILS (31/2" × 0.135") [2 TOE NAILS ON ONE SIDE AND 1 TOE NAIL ON OPPOSITE SIDE OF EACH RAFTER OR TRUSS].
6. ROOF RAFTERS TO RIDGE: 4-16D (31/2" × 0.135") [TOE NAIL].
7. 7/16" INTERIOR WALL SHEATHING: 6D COMMON (2" × 0.113") NAIL (SUBFLOOR, WALL) WITH 6" SPACING PER STUD.
8. EXTERIOR WALL SIDING WITH MIN. PANEL THICKNESS OF 5/8": 8D COMMON (2.5" × 0.131") NAIL, EDGE SPACING 6" & FIELD SPACING 12".
9. EXTERIOR WALL SIDING WITH MIN. PANEL THICKNESS OF 3/8" (ROOFING): 6D COMMON (2.0" × 0.113") NAIL, EDGE SPACING 6" & FIELD SPACING 12".

90% DESIGN

Issue No.	Description	Date	Drwn.	Chkd.	Resp. Engr.	Proj. Mgr.

HORIZONTAL DATUM IS THE CALIFORNIA COORDINATE SYSTEM, ZONE 2 (NAD 83)

VERTICAL DATUM IS NAVD 88

EL NAVD 88 =
EL NGVD 29+2.6'

cbec eco engineering

BAR LENGTH ON ORIGINAL DRAWING EQUALS ONE INCH. ADJUST SCALE ACCORDINGLY.

Project Manager: D. BROWN
Designed: S. DIAZ
Designed: G. O'TOOLE
Checked: C. BOWLES
Drawn: J. INGRAM

SACRAMENTO-SAN JOAQUIN DELTA CONSERVANCY
BEES LAKES HABITAT RESTORATION PROJECT

PUMP SHED DETAILS GENERAL

Date	Project No.	Drawing No.	Issue
DECEMBER 2023	23-1005	C-36	X
Scale: AS NOTED	File Name: DETAILS.DWG		

XXXXXXX\XXX.DWG
XX/XX/XX

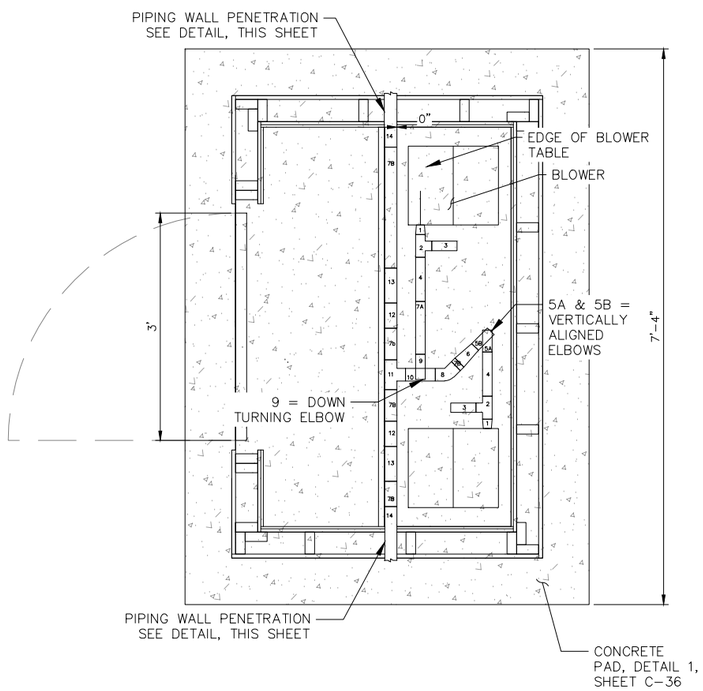

BLOWER BENCH PIPING

SCALE: 1" = 1'

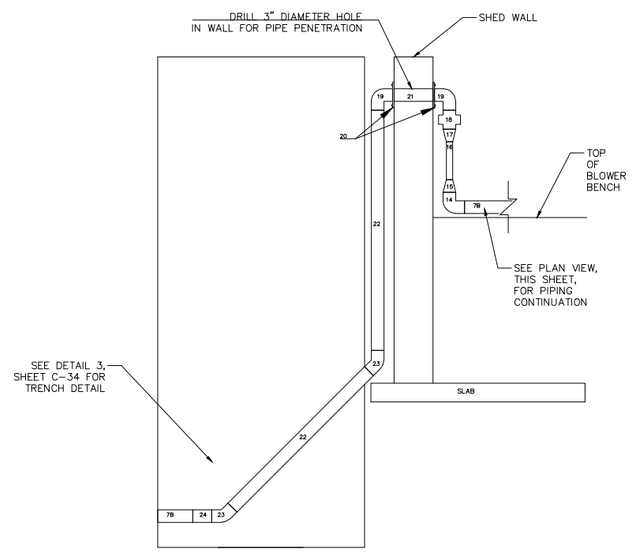

WALL PENETRATION AND UNDERGROUNDING

SCALE: 1" = 1'

PIPE FITTING SIZES	
1	REDUCING ADAPTER 1.25"ø–1.5"ø SOCKET
2	1.5"ø TEE
3	PRESSURE RELIEF VALVE
4	TRUE UNION BALL VALVE 1.5"ø
5	1.5"ø 90° ELBOW
6	REDUCING ADAPTER 1.5"ø–2"ø
7	PVC Pipe Sch40, 7a=1.5"ø, 7B=2"ø
8	2"ø 45° ELBOW
9	REDUCING ELBOW, 2"ø–1.5"ø, TURNING DOWN
10	2"ø SPIGOT TEE
11	2"ø PVC TEE
12	2"ø GATE VALVE
13	2"ø REDUCING TEE WITH PRESSURE GAGE
14	2"ø 90° ELBOW
15	SOCKET MPT 2"ø–1"ø ADAPTER COUPLING PVC
16	AIRFLOW ROTAMETER 5–50CFM
17	2"ø–1"ø FPT ADAPTER COUPLING
18	2"ø FPT UNION COUPLING
19	2"ø FPT STEEL 90° ELBOW
20	PASS–THROUGH PIPE SLEEVE/FLANGE BOLTED TO WALL
21	2"ø STEEL NIPPLE
22	2"ø STEEL PIPE
23	45° STEEL ELBOW
24	2"ø MPT–SOCKET COUPLING SCH80 PVC

XXXXXXX\XXX.DWG
XX/XX/XX

Issue No.	Description	Date	Drwn.	Chkd.	Resp. Engr.	Proj. Mgr.

HORIZONTAL DATUM IS THE CALIFORNIA COORDINATE SYSTEM, ZONE 2 (NAD 83)

VERTICAL DATUM IS NAVD 88

EL NAVD 88 =
EL NGVD 29+2.6'

cbec eco engineering

BAR LENGTH ON ORIGINAL DRAWING EQUALS ONE INCH. ADJUST SCALE ACCORDINGLY.

Project Manager: D. BROWN
Designed: S. DIAZ
Designed: G. O'TOOLE
Checked: C. BOWLES
Drawn: J. INGRAM

SACRAMENTO-SAN JOAQUIN DELTA CONSERVANCY
BEES LAKES HABITAT RESTORATION PROJECT

90% DESIGN

AERATION DETAILS - LAND

Date	Project No.	Drawing No.	Issue
DECEMBER 2023	23–1005	C-37	X
Scale: AS NOTED	File Name: DETAILS.DWG		

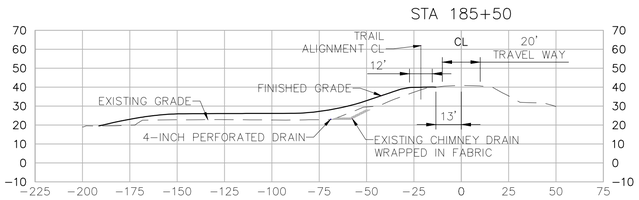

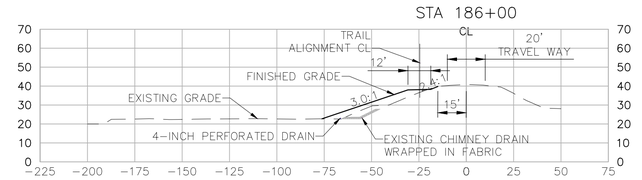

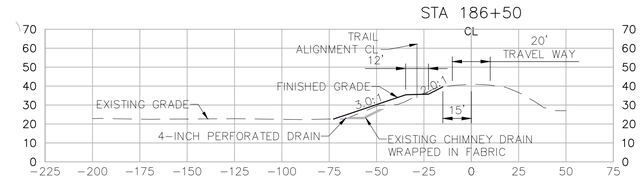

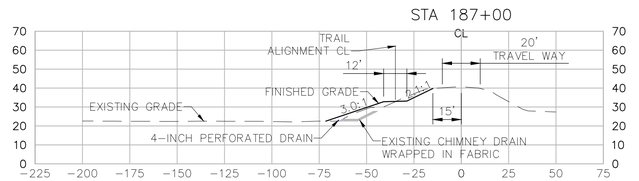

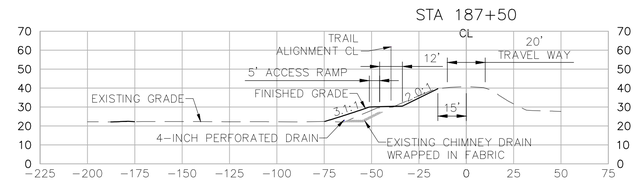

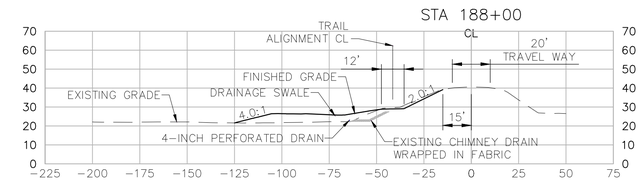

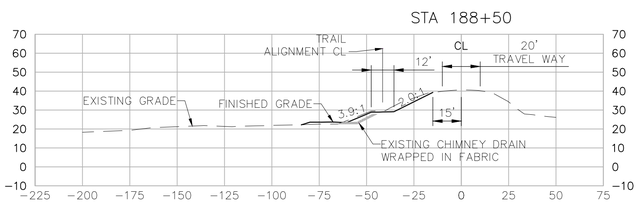

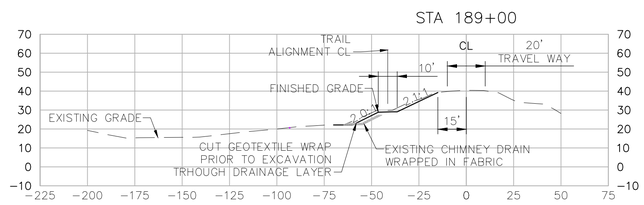

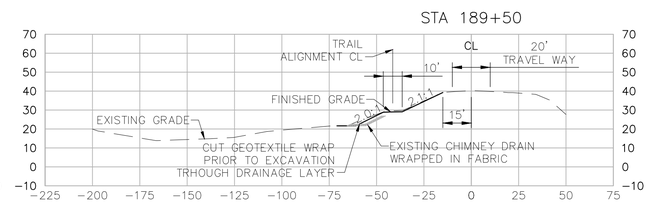

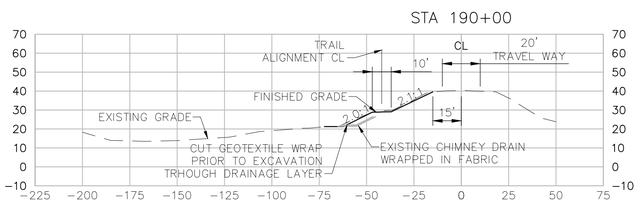

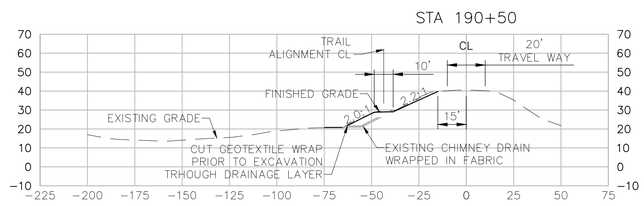

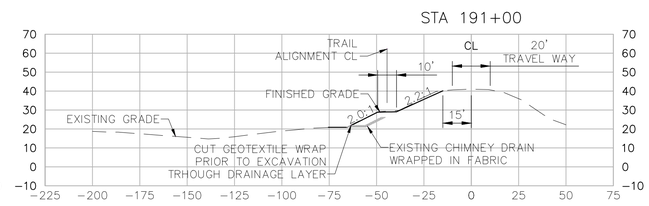

C:\PWWORKING\WEST01\D2918499\C-40.DWG
November 20, 2023

Issue No.	Description	Date	Drwn.	Chkd.	Resp. Engr.	Proj. Mgr.
–	–	–	–	–	–	–

HORIZONTAL DATUM IS THE CALIFORNIA COORDINATE SYSTEM, ZONE 2 (NAD 83)

VERTICAL DATUM IS NAVD 88

EL NAVD 88 =
EL NGVD 29+2.6'

HDR Engineering, Inc.

BAR LENGTH ON ORIGINAL DRAWING EQUALS ONE INCH. ADJUST SCALE ACCORDINGLY.

Project Manager: K. JAMESON
Designed: V. RUSSO
Designed: X
Checked: K. FELLOWS
Drawn: V. RUSSO

SACRAMENTO-SAN JOAQUIN DELTA CONSERVANCY
BEES LAKES HABITAT RESTORATION PROJECT

90% DESIGN

SECTIONS (CHICORY LOOP ALIGNMENT) STA 185+50 TO STA 191+00

Date	Project No.	Drawing No.	Issue
NOVEMBER, 2023	3223-10358905	C-40	X
Scale: AS NOTED	File Name: C-40.DWG		

STA 191+50

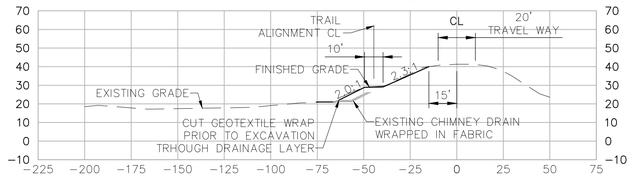

STA 192+00

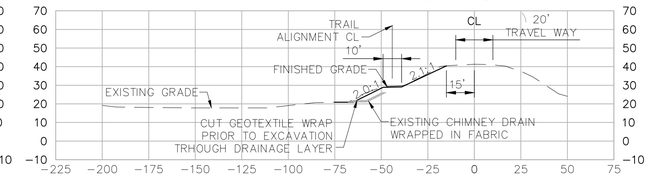

STA 192+50

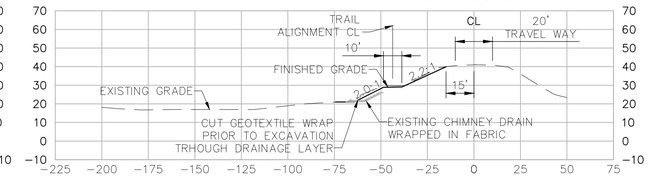

STA 193+00

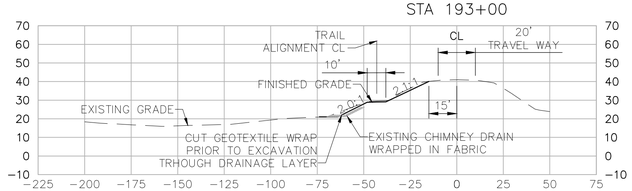

STA 193+50

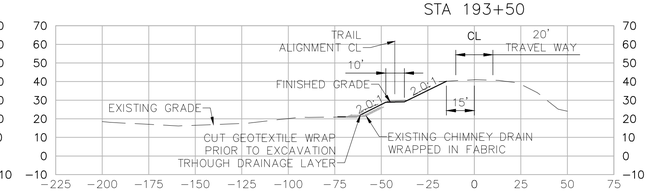

STA 194+00

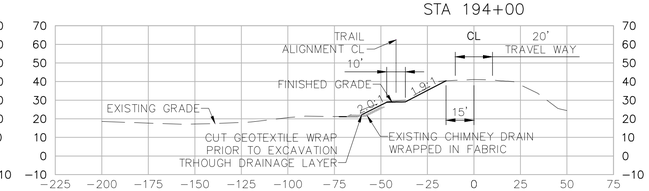

STA 194+50

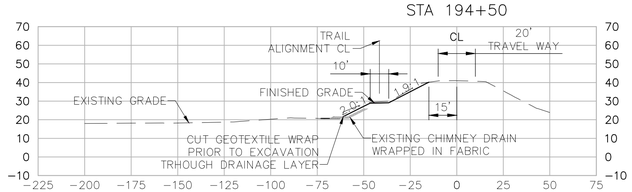

STA 195+00

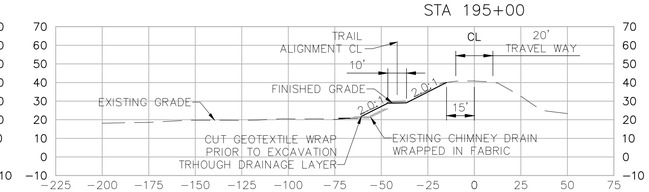

STA 195+50

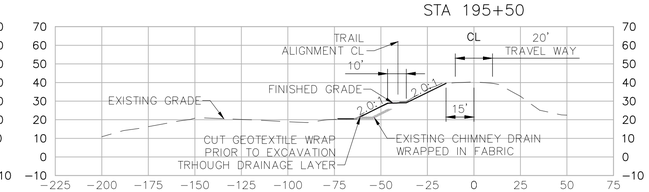

STA 196+00

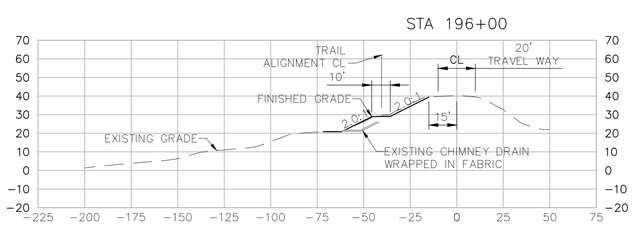

STA 196+50

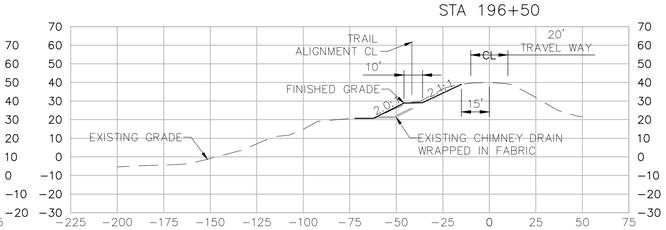

STA 197+00

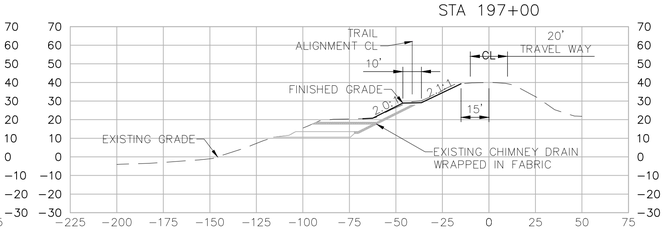

C:\PWWORKING\WEST01\D2918499\C-41.DWG
November 20, 2023

Issue No.	Description	Date	Drawn.	Chkd.	Resp. Engr.	Proj. Mgr.
–	–	–	–	–	–	–

HORIZONTAL DATUM IS THE CALIFORNIA COORDINATE SYSTEM, ZONE 2 (NAD 83)

VERTICAL DATUM IS NAVD 88

EL NAVD 88 =
EL NGVD 29+2.6'

HDR Engineering, Inc.

BAR LENGTH ON ORIGINAL DRAWING EQUALS ONE INCH. ADJUST SCALE ACCORDINGLY.

Project Manager: K. JAMESON
Designed: V. RUSSO
Designed: X
Checked: K. FELLOWS
Drawn: V. RUSSO

SACRAMENTO-SAN JOAQUIN DELTA CONSERVANCY
BEES LAKES HABITAT RESTORATION PROJECT

90% DESIGN

SECTIONS (CHICORY LOOP ALIGNMENT)
STA 191+50 TO STA 197+00

Date	Project No.	Drawing No.	Issue
NOVEMBER, 2023	3223–10358905	C-41	X
Scale: AS NOTED	File Name: C–41.DWG		

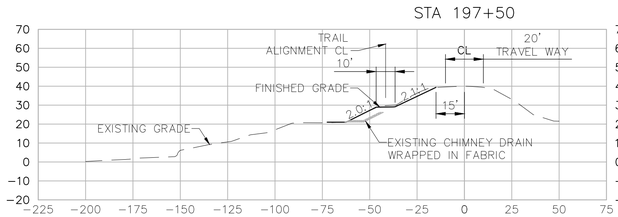

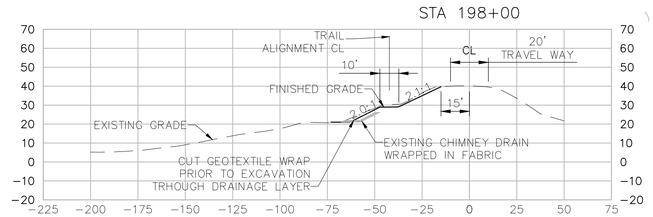

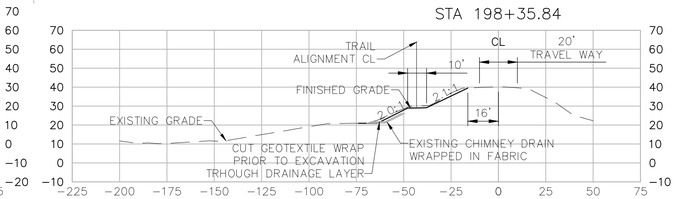

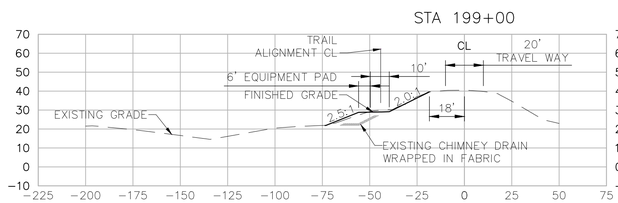

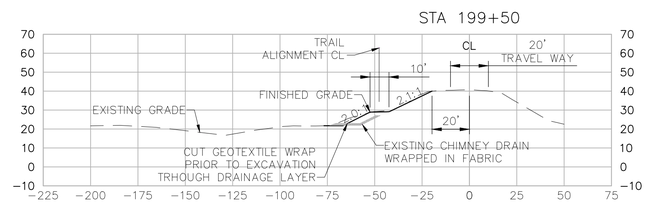

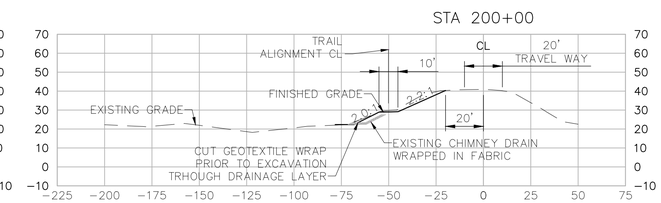

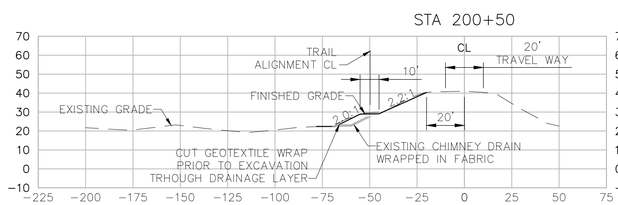

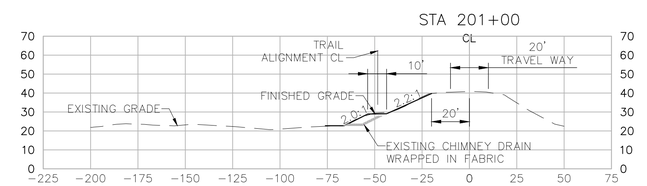

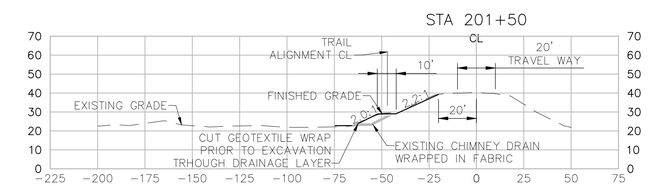

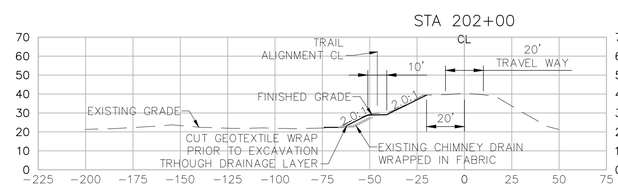

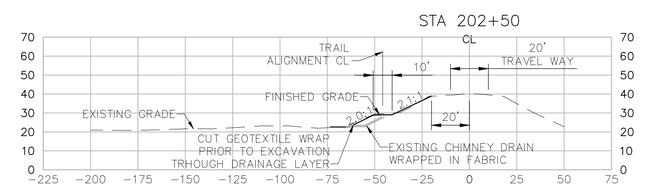

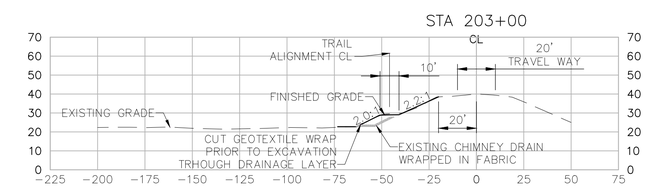

C:\PWWORKING\WEST01\D2918499\C-42.DWG
November 20, 2023

Issue No.	Description	Date	Drwn.	Chkd.	Resp. Engr.	Proj. Mgr.
–	–	–	–	–	–	–

HORIZONTAL DATUM IS THE CALIFORNIA COORDINATE SYSTEM, ZONE 2 (NAD 83)

VERTICAL DATUM IS NAVD 88

EL NAVD 88 =
EL NGVD 29+2.6'

HDR Engineering, Inc.

BAR LENGTH ON ORIGINAL DRAWING EQUALS ONE INCH. ADJUST SCALE ACCORDINGLY.

Project Manager: K. JAMESON
Designed: V. RUSSO
Designed: X
Checked: K. FELLOWS
Drawn: V. RUSSO

SACRAMENTO-SAN JOAQUIN DELTA CONSERVANCY
BEES LAKES HABITAT RESTORATION PROJECT

90% DESIGN

SECTIONS (CHICORY LOOP ALIGNMENT)
STA 197+50 TO STA 203+00

Date	Project No.	Drawing No.	Issue
NOVEMBER, 2023	3223–10358905	C-42	X
Scale: AS NOTED	File Name: C–42.DWG		

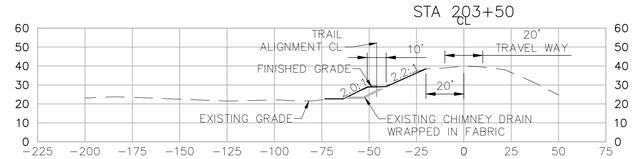

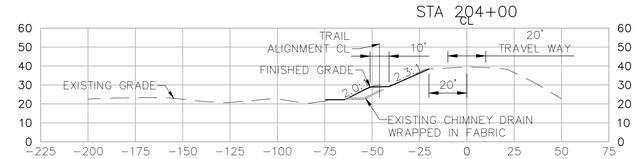

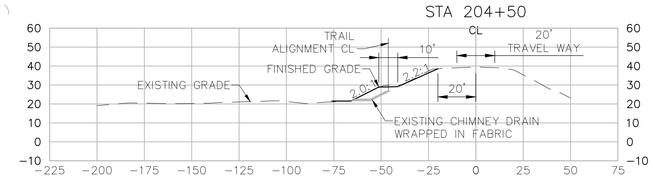

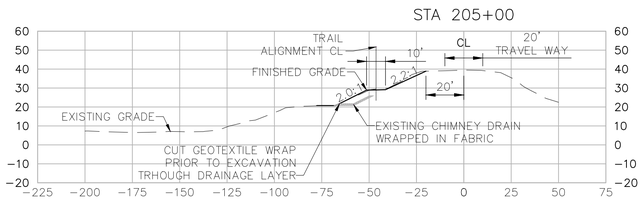

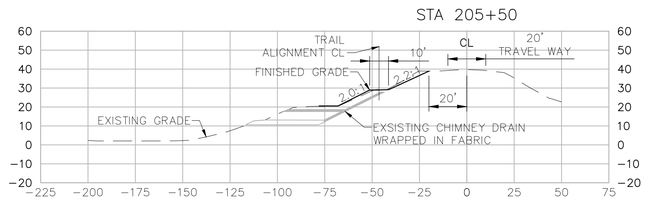

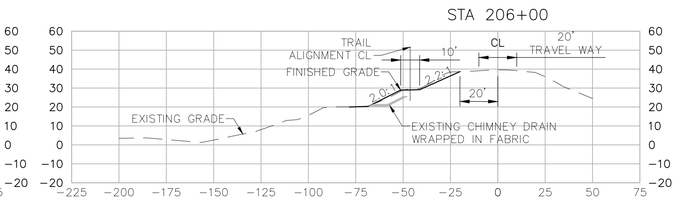

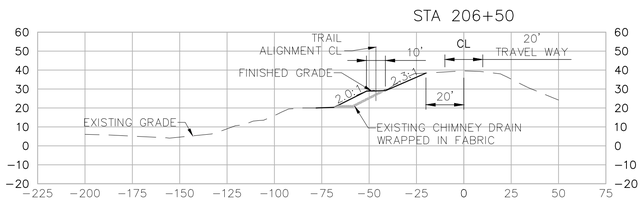

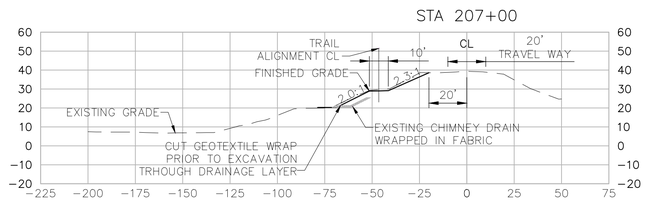

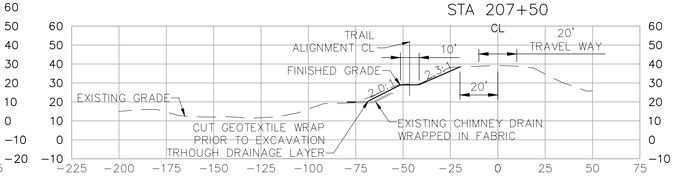

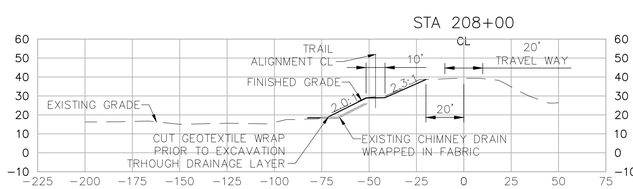

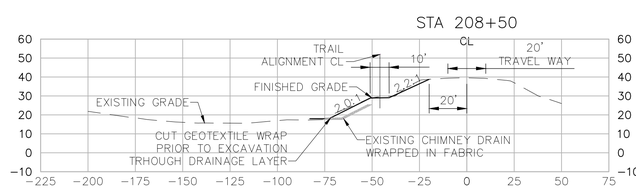

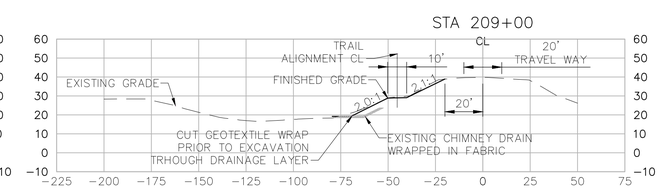

C:\PWWORKING\WEST01\D2918499\C-43.DWG
November 20, 2023

Issue No.	Description	Date	Drwn.	Chkd.	Resp. Engr.	Proj. Mgr.
–	–	–	–	–	–	–

HORIZONTAL DATUM IS THE CALIFORNIA COORDINATE SYSTEM, ZONE 2 (NAD 83)

VERTICAL DATUM IS NAVD 88

EL NAVD 88 =
EL NGVD 29+2.6'

HDR Engineering, Inc.

BAR LENGTH ON ORIGINAL DRAWING EQUALS ONE INCH. ADJUST SCALE ACCORDINGLY.

Project Manager: K. JAMESON
Designed: V. RUSSO
Designed: X
Checked: K. FELLOWS
Drawn: V. RUSSO

SACRAMENTO-SAN JOAQUIN DELTA CONSERVANCY
BEES LAKES HABITAT RESTORATION PROJECT

90% DESIGN

SECTIONS (CHICORY LOOP ALIGNMENT)
STA 203+50 TO STA 209+00

Date	Project No.	Drawing No.	Issue
NOVEMBER, 2023	3223–10358905	C-43	X
Scale: AS NOTED	File Name: C–43.DWG		

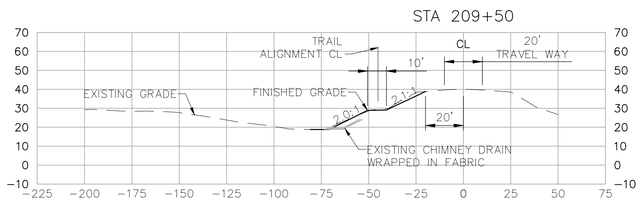

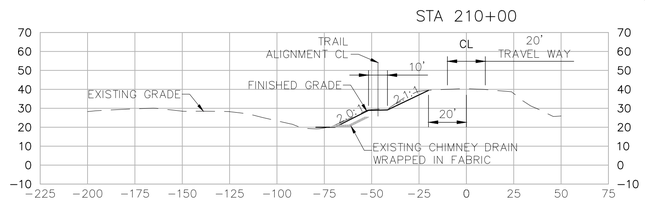

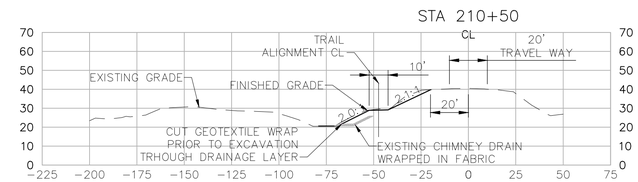

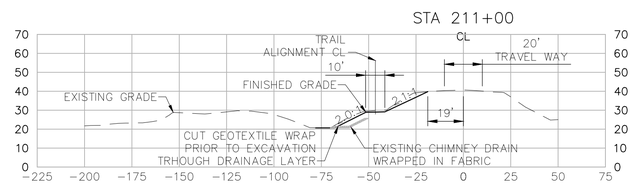

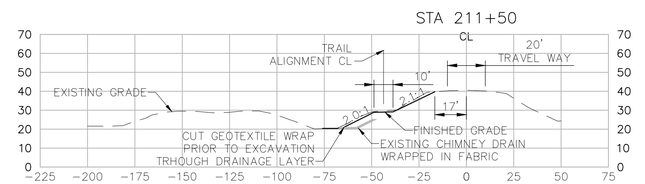

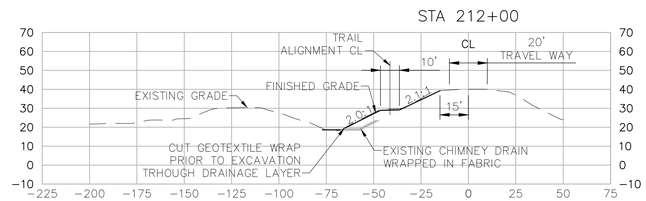

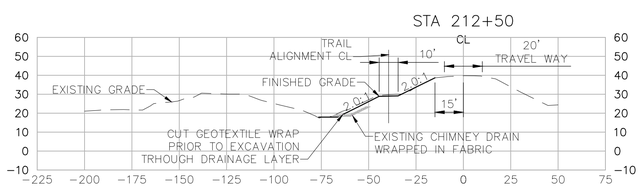

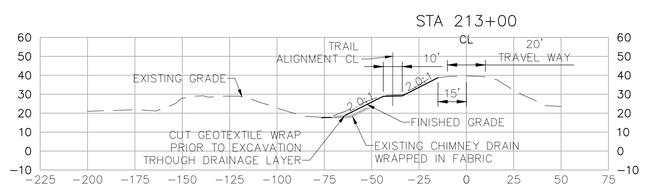

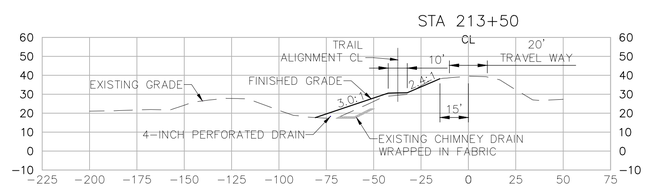

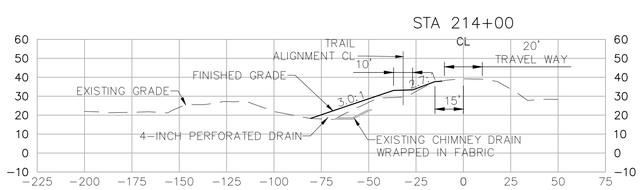

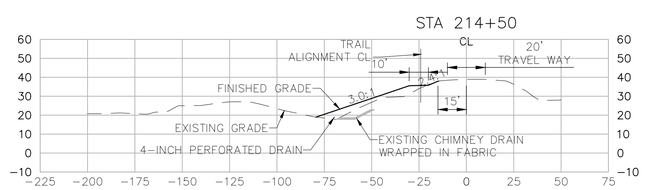

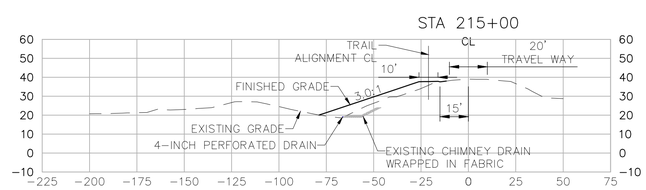

C:\PWWORKING\WEST01\D2918499\C-44.DWG
November 20, 2023

Issue No.	Description	Date	Drwn.	Chkd.	Resp. Engr.	Proj. Mgr.
–	–	–	–	–	–	–

HORIZONTAL DATUM IS THE CALIFORNIA COORDINATE SYSTEM, ZONE 2 (NAD 83)

VERTICAL DATUM IS NAVD 88

EL NAVD 88 =
EL NGVD 29+2.6'

HDR Engineering, Inc.

BAR LENGTH ON ORIGINAL DRAWING EQUALS ONE INCH. ADJUST SCALE ACCORDINGLY.

Project Manager: K. JAMESON
Designed: V. RUSSO
Designed: X
Checked: K. FELLOWS
Drawn: V. RUSSO

SACRAMENTO-SAN JOAQUIN DELTA CONSERVANCY
BEES LAKES HABITAT RESTORATION PROJECT

90% DESIGN

SECTIONS (CHICORY LOOP ALIGNMENT)
STA 209+50 TO STA 215+00

Date	Project No.	Drawing No.	Issue
NOVEMBER, 2023	3223-10358905	C-44	X
Scale: AS NOTED	File Name: C-44.DWG		

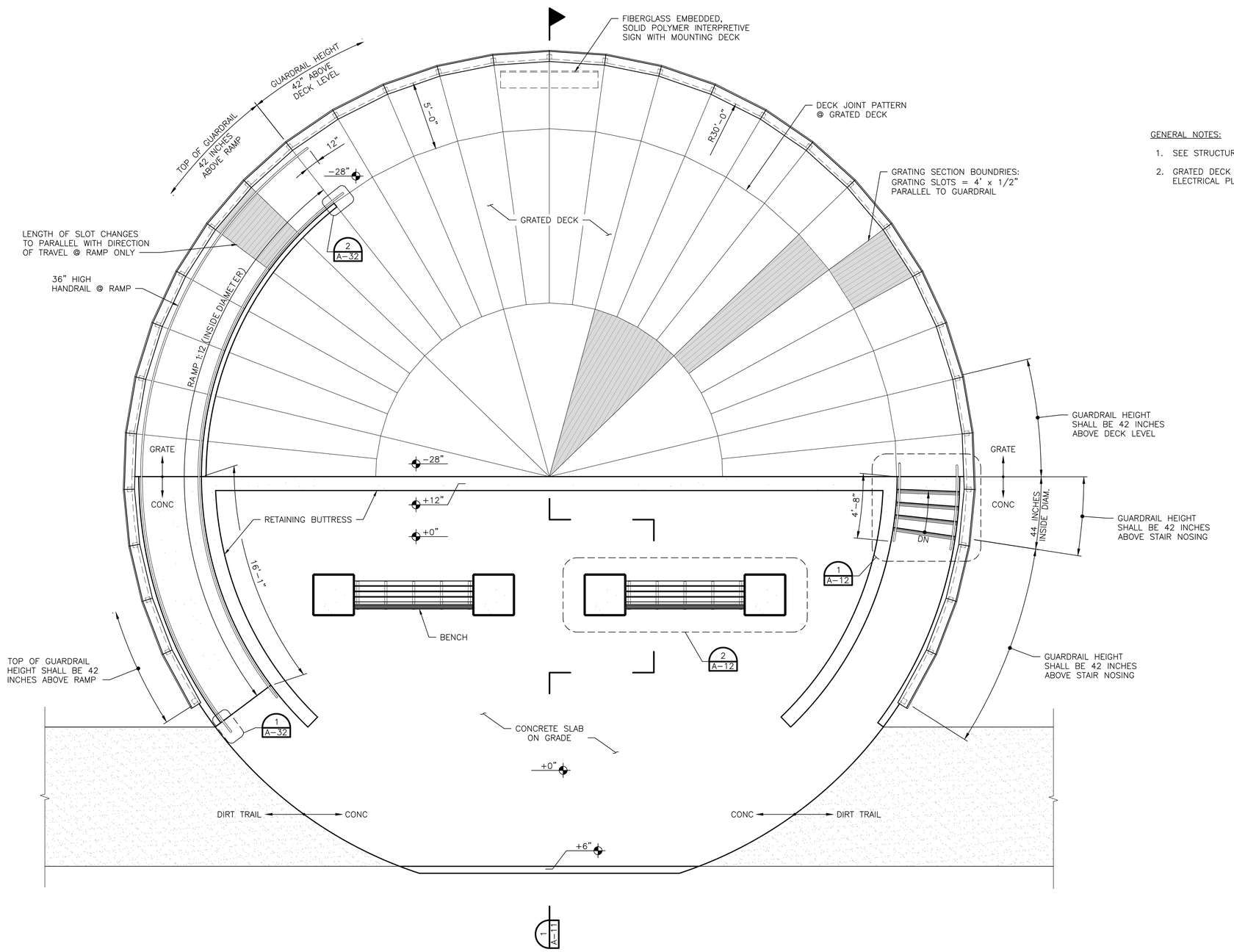

MAIN POND VIEWING PLATFORM PLAN

1/4" = 1'-0"

GENERAL NOTES:

1. SEE STRUCTURAL DRAWINGS FOR DIMENSIONS NOT SHOWN.
2. GRATED DECK SHALL BE ELECTRICALLY GROUNDED. SEE ELECTRICAL PLANS.

90% DESIGN

Issue No.	Description	Date	Drwn.	Chkd.	Resp. Engr.	Proj. Mgr.

HORIZONTAL DATUM IS THE CALIFORNIA COORDINATE SYSTEM, ZONE 2 (NAD 83)

VERTICAL DATUM IS NAVD 88

EL NAVD 88 = EL NGVD 29+2.6'

HDR Engineering, Inc.

BAR LENGTH ON ORIGINAL DRAWING EQUALS ONE INCH. ADJUST SCALE ACCORDINGLY.

Project Manager: K. JAMESON
Designed: M. LAMBERT
Designed: X
Checked: X
Drawn: M. MENDOZA

SACRAMENTO-SAN JOAQUIN DELTA CONSERVANCY
BEES LAKES HABITAT RESTORATION PROJECT

BEES LAKES
MAIN POND VIEWING PLATFORM PLAN

Date	Project No.	Drawing No.	Issue
NOVEMBER, 2023	3223-10358905	A-10	X
Scale: 1/4" = 1'-0"	File Name: A-10.DWG		

C:\PWWORKING\WEST01\D2918499\A-10.DWG
November 21, 2023

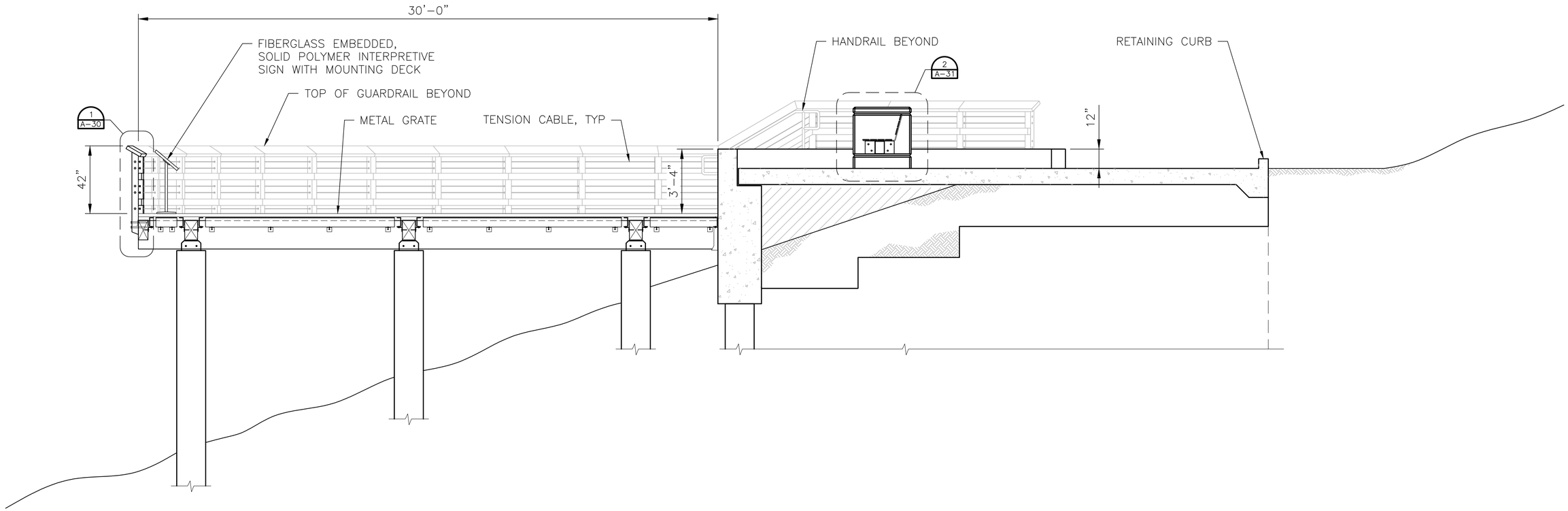

MAIN POND VIEWING PLATFORM SECTION

1 / –

3/8" = 1'-0"

C:\PWWORKING\WEST01\D2918499\A-11.DWG
November 21, 2023

Issue No.	Description	Date	Drwn.	Chkd.	Resp. Engr.	Proj. Mgr.

HORIZONTAL DATUM IS THE CALIFORNIA COORDINATE SYSTEM, ZONE 2 (NAD 83)

VERTICAL DATUM IS NAVD 88

EL NAVD 88 =
EL NGVD 29+2.6'

HDR Engineering, Inc.

BAR LENGTH ON ORIGINAL DRAWING EQUALS ONE INCH. ADJUST SCALE ACCORDINGLY.

Project Manager: K. JAMESON
Designed: M. LAMBERT
Designed: X
Checked: X
Drawn: M. MENDOZA

SACRAMENTO-SAN JOAQUIN DELTA CONSERVANCY
BEES LAKES HABITAT RESTORATION PROJECT

90% DESIGN

BEES LAKES
MAIN POND VIEWING PLATFORM SECTION

Date	Project No.	Drawing No.	Issue
NOVEMBER, 2023	3223-10358905	A-11	X
Scale: 3/8" = 1'-0"	File Name: A-11.DWG		

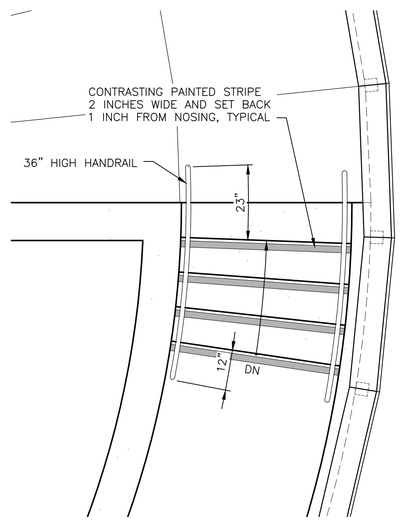

ENLARGED PLAN – STAIRS (1 / A–10)

1/2" = 1'–0"

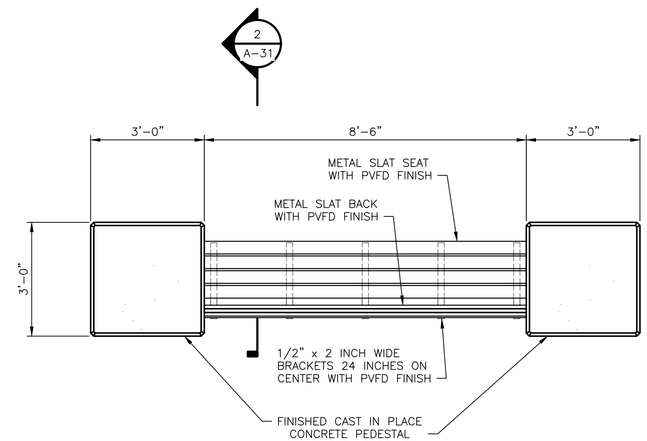

ENLARGED PLAN – BENCH (2 / A–10)

1/2" = 1'–0"

C:\PWWORKING\WEST01\D2918499\A-12.DWG
November 21, 2023

Issue No.	Description	Date	Drwn.	Chkd.	Resp. Engr.	Proj. Mgr.

HORIZONTAL DATUM IS THE CALIFORNIA COORDINATE SYSTEM, ZONE 2 (NAD 83)

VERTICAL DATUM IS NAVD 88

EL NAVD 88 =
EL NGVD 29+2.6'

HDR Engineering, Inc.

BAR LENGTH ON ORIGINAL DRAWING EQUALS ONE INCH. ADJUST SCALE ACCORDINGLY.

Project Manager: K. JAMESON
Designed: M. LAMBERT
Designed: X
Checked: X
Drawn: M. MENDOZA

SACRAMENTO-SAN JOAQUIN DELTA CONSERVANCY
BEES LAKES HABITAT RESTORATION PROJECT

90% DESIGN

BEES LAKES
MAIN POND VIEWING PLATFORM ENLARGED PLANS

Date	Project No.	Drawing No.	Issue
NOVEMBER, 2023	3223–10358905	A-12	X
Scale: 1/2" = 1'–0"	File Name: A–12.DWG		

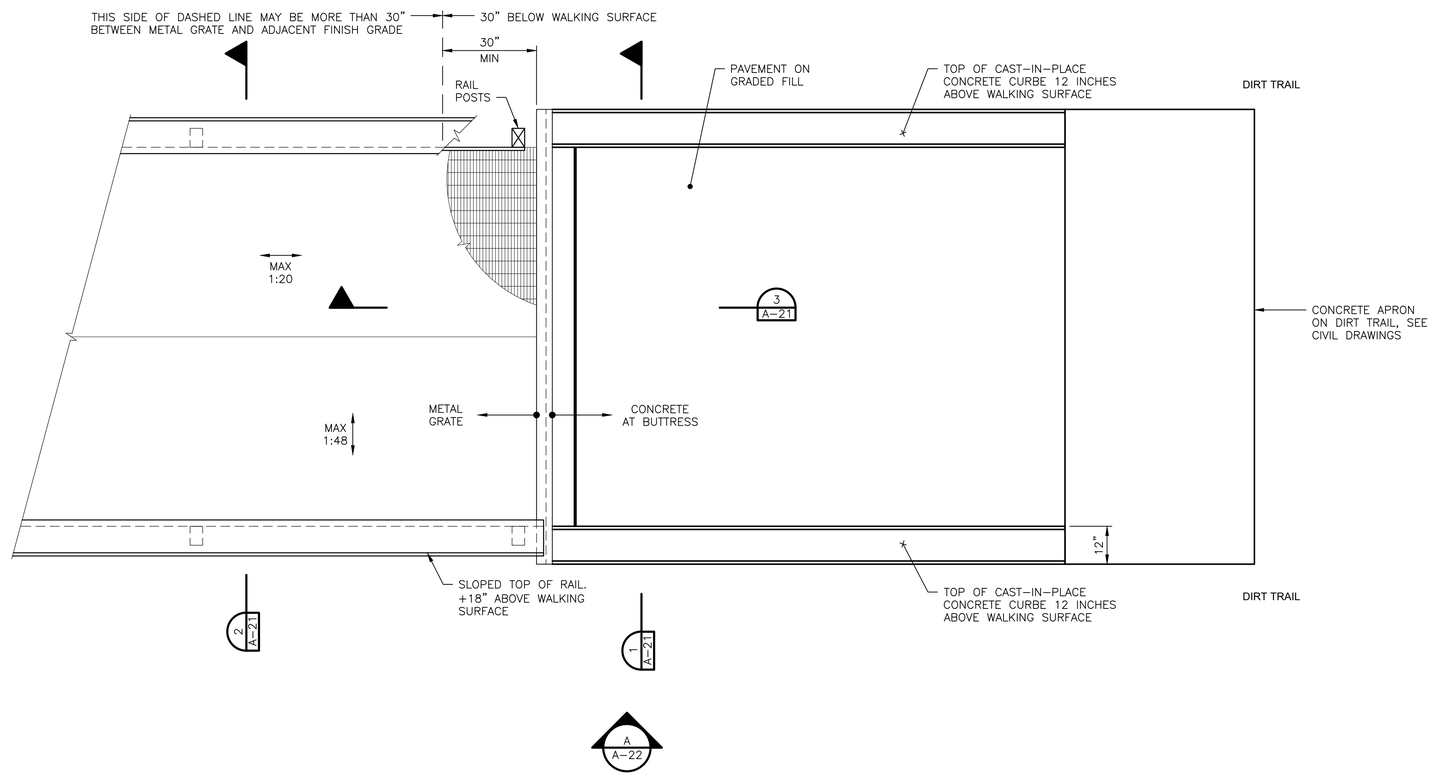

RETAINING BUTTRESS PARTIAL PLAN / RETAINING BUTTRESS PARTIAL PLAN

1/2" = 1'-0"

C:\PWWORKING\WESTO1\D2918499\A-20.DWG
November 21, 2023

Issue No.	Description	Date	Drwn.	Chkd.	Resp. Engr.	Proj. Mgr.

HORIZONTAL DATUM IS THE CALIFORNIA COORDINATE SYSTEM, ZONE 2 (NAD 83)

VERTICAL DATUM IS NAVD 88

EL NAVD 88 =
EL NGVD 29+2.6'

HDR Engineering, Inc.

BAR LENGTH ON ORIGINAL DRAWING EQUALS ONE INCH. ADJUST SCALE ACCORDINGLY.

Project Manager: K. JAMESON
Designed: M. LAMBERT
Designed: X
Checked: X
Drawn: M. MENDOZA

SACRAMENTO-SAN JOAQUIN DELTA CONSERVANCY
BEES LAKES HABITAT RESTORATION PROJECT

90% DESIGN

BEES LAKES
ELEVATED PILE SUPPORTED TRAIL / RETAINING BUTTRESS PARTIAL PLAN

Date	Project No.	Drawing No.	Issue
NOVEMBER, 2023	3223-10358905	A-20	X
Scale: 1/2" = 1'-0"	File Name: A-20.DWG		

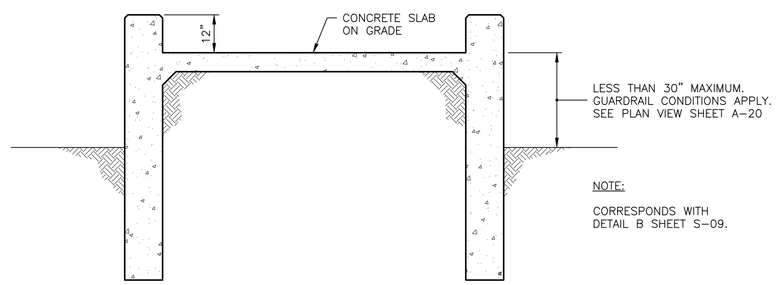

NOTE:

CORRESPONDS WITH
DETAIL B SHEET S-09.

ELEVATED PILE SUPPORTED TRAIL / SECTION – CONCRETE

1/2" = 1'-0"

1 / –

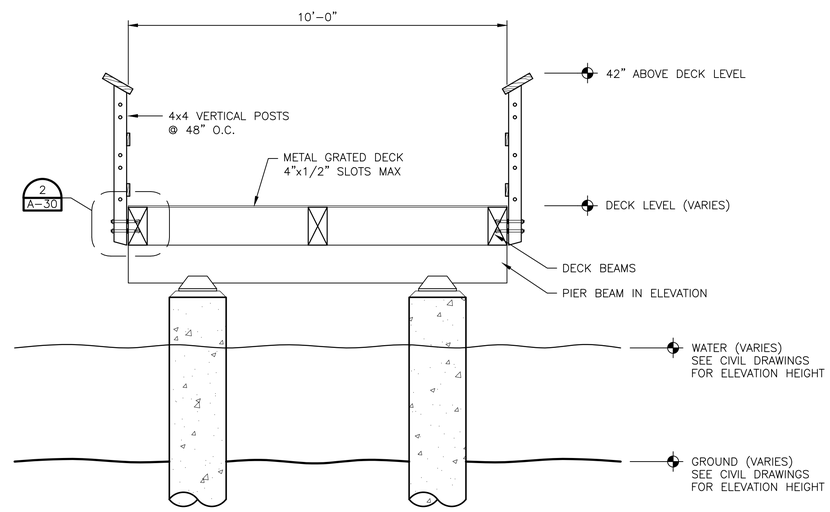

ELEVATED PILE SUPPORTED TRAIL / SECTION – GRATING

1/2" = 1'-0"

2 / –

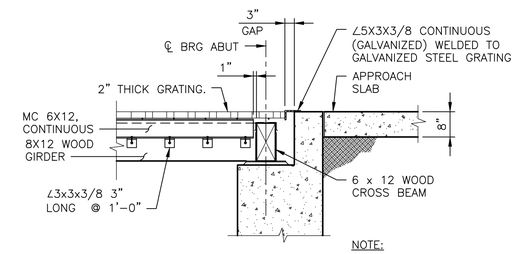

NOTE:

CORRESPONDS WITH
DETAIL A SHEET S-08.

RETAINING BUTTRESS SECTION

1/2" = 1'-0"

3 / –

C:\PWWORKING\WEST01\D2918499\A-21.DWG
November 21, 2023

Issue No.	Description	Date	Drwn.	Chkd.	Resp. Engr.	Proj. Mgr.

HORIZONTAL DATUM IS THE CALIFORNIA COORDINATE SYSTEM, ZONE 2 (NAD 83)

VERTICAL DATUM IS NAVD 88

EL NAVD 88 =
EL NGVD 29+2.6'

HDR Engineering, Inc.

BAR LENGTH ON ORIGINAL DRAWING EQUALS ONE INCH. ADJUST SCALE ACCORDINGLY.

Project Manager: K. JAMESON
Designed: M. LAMBERT
Designed: X
Checked: X
Drawn: M. MENDOZA

SACRAMENTO-SAN JOAQUIN DELTA CONSERVANCY
BEES LAKES HABITAT RESTORATION PROJECT

90% DESIGN

BEES LAKES
ELEVATED PILE SUPPORTED TRAIL / RETAINING BUTTRESS SECTIONS

Date	Project No.	Drawing No.	Issue
NOVEMBER, 2023	3223-10358905	A-21	X
Scale: 1/2" = 1'-0"	File Name: A-21.DWG		

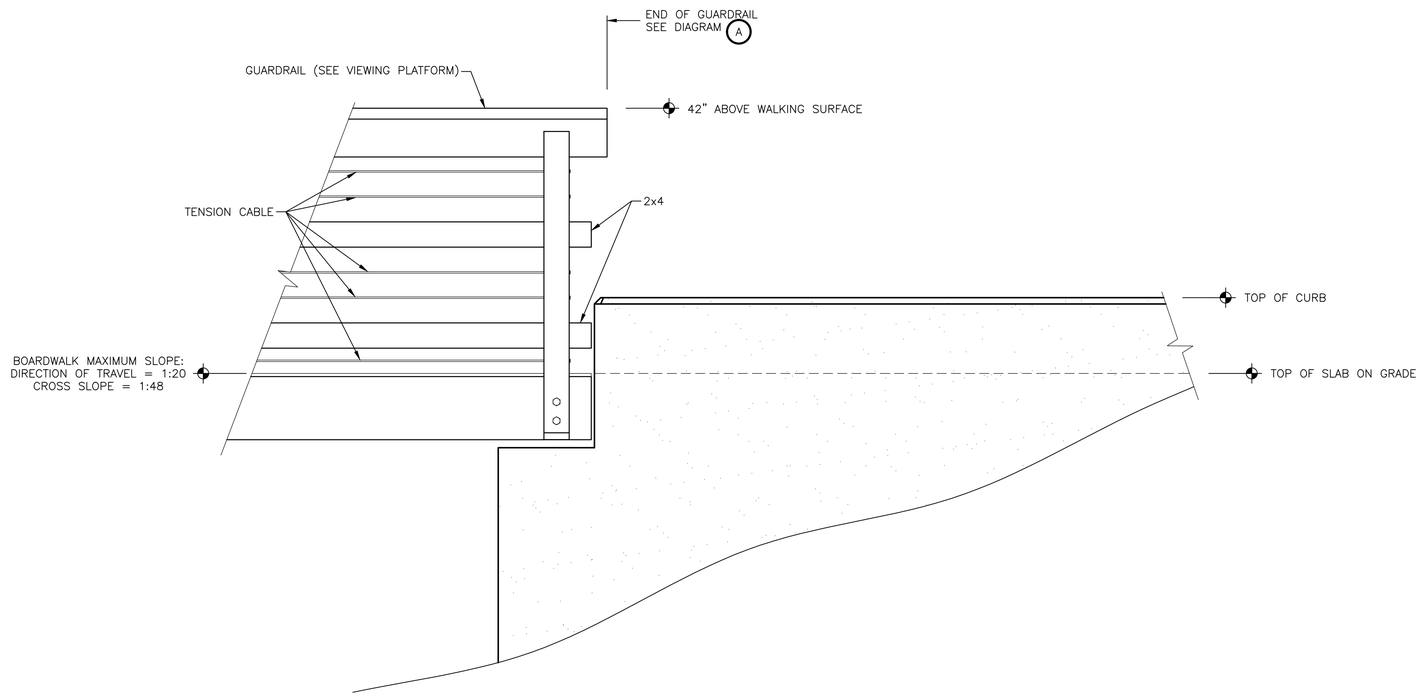

ELEVATED PILE SUPPORTED TRAIL / RETAINING BUTTRESS ELEVATION

A
—

1" = 1'-0"

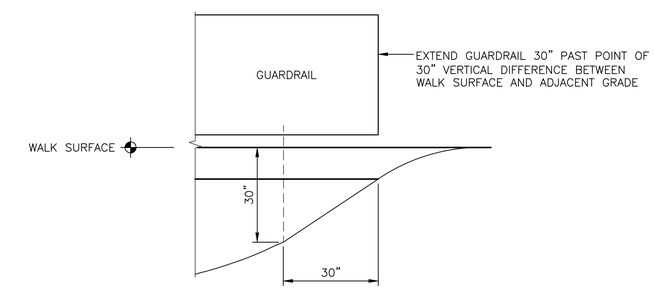

DIAGRAM A

NTS

90% DESIGN

Issue No.	Description	Date	Drwn.	Chkd.	Resp. Engr.	Proj. Mgr.

HORIZONTAL DATUM IS THE CALIFORNIA COORDINATE SYSTEM, ZONE 2 (NAD 83)

VERTICAL DATUM IS NAVD 88

EL NAVD 88 =
EL NGVD 29+2.6'

HDR Engineering, Inc.

BAR LENGTH ON ORIGINAL DRAWING EQUALS ONE INCH. ADJUST SCALE ACCORDINGLY.

Project Manager: K. JAMESON
Designed: M. LAMBERT
Designed: X
Checked: X
Drawn: M. MENDOZA

SACRAMENTO-SAN JOAQUIN DELTA CONSERVANCY
BEES LAKES HABITAT RESTORATION PROJECT

BEES LAKES
ELEVATED PILE SUPPORTED TRAIL / RETAINING BUTTRESS ELEVATION

Date	Project No.	Drawing No.	Issue
NOVEMBER, 2023	3223-10358905	A-22	X
Scale: 1" = 1'-0"	File Name: A-22.DWG		

C:\PWWORKING\WEST01\D2918499\A-22.DWG
November 21, 2023

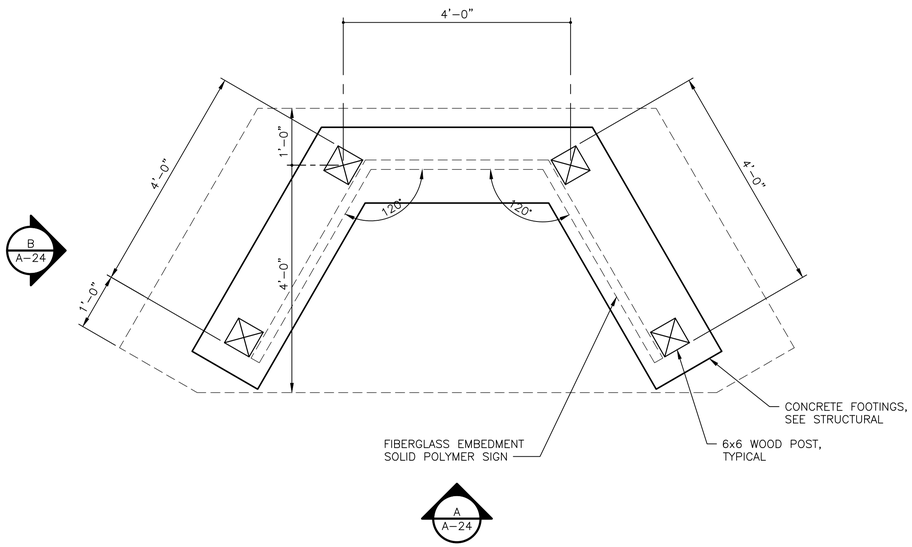

KIOSK FLOOR PLAN

3/4" = 1'-0"

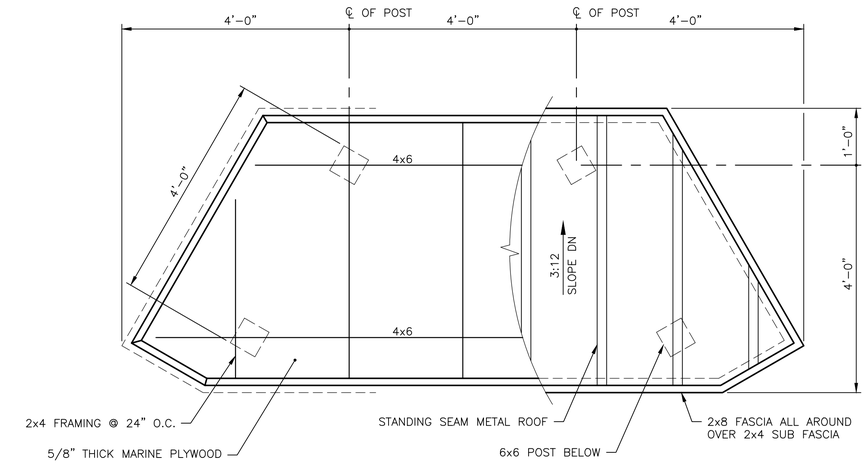

KIOSK ROOF PLAN

3/4" = 1'-0"

C:\PWWORKING\WEST01\D2918499\A-23.DWG
November 21, 2023

Issue No.	Description	Date	Drwn.	Chkd.	Resp. Engr.	Proj. Mgr.

HORIZONTAL DATUM IS THE CALIFORNIA COORDINATE SYSTEM, ZONE 2 (NAD 83)

VERTICAL DATUM IS NAVD 88

EL NAVD 88 =
EL NGVD 29+2.6'

HDR Engineering, Inc.

BAR LENGTH ON ORIGINAL DRAWING EQUALS ONE INCH. ADJUST SCALE ACCORDINGLY.

Project Manager: K. JAMESON
Designed: M. LAMBERT
Designed: X
Checked: X
Drawn: M. MENDOZA

SACRAMENTO-SAN JOAQUIN DELTA CONSERVANCY
BEES LAKES HABITAT RESTORATION PROJECT

90% DESIGN

BEES LAKES
KIOSK FLOOR AND ROOF PLANS

Date	Project No.	Drawing No.	Issue
NOVEMBER, 2023	3223-10358905	A-23	X
Scale: 3/4" = 1'-0"	File Name: A-23.DWG		

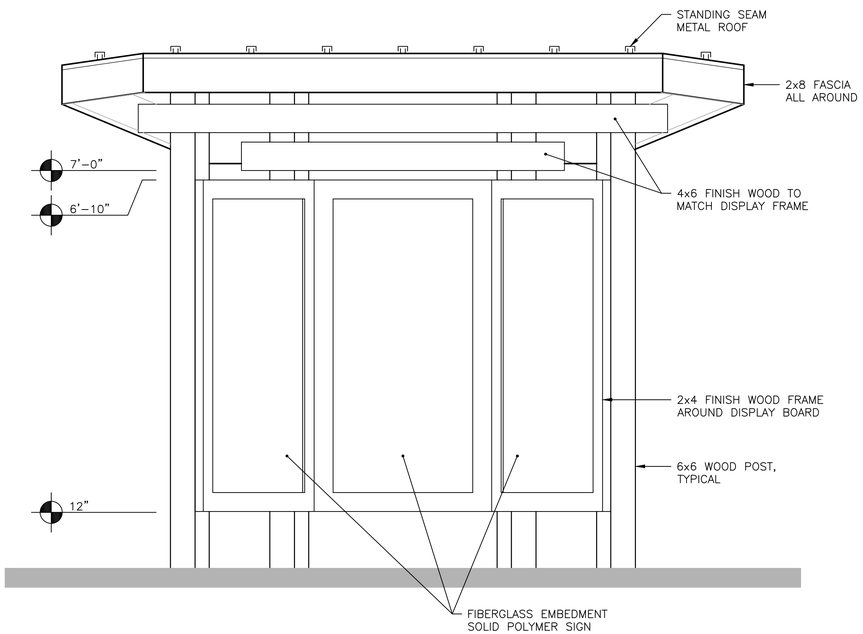

KIOSK ELEVATION – FRONT (A)

3/4" = 1'–0"

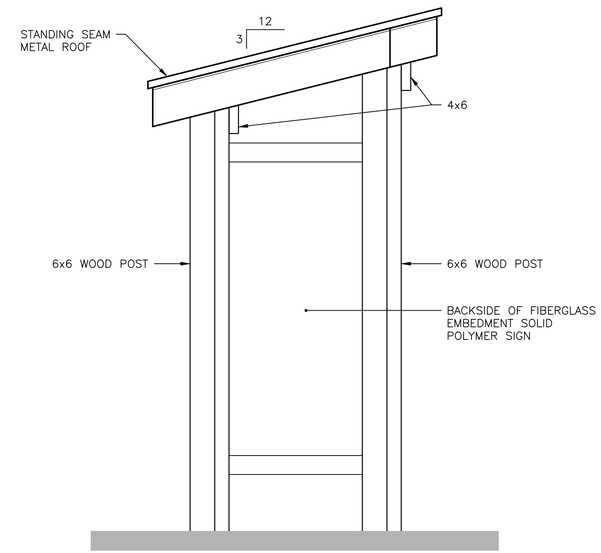

KIOSK ELEVATION – SIDE (B)

3/4" = 1'–0"

C:\PWWORKING\WEST01\D2918499\A-24.DWG
November 21, 2023

Issue No.	Description	Date	Drwn.	Chkd.	Resp. Engr.	Proj. Mgr.

HORIZONTAL DATUM IS THE CALIFORNIA COORDINATE SYSTEM, ZONE 2 (NAD 83)

VERTICAL DATUM IS NAVD 88

EL NAVD 88 =
EL NGVD 29+2.6'

HDR Engineering, Inc.

BAR LENGTH ON ORIGINAL DRAWING EQUALS ONE INCH. ADJUST SCALE ACCORDINGLY.

Project Manager: K. JAMESON
Designed: M. LAMBERT
Designed: X
Checked: X
Drawn: M. MENDOZA

SACRAMENTO-SAN JOAQUIN DELTA CONSERVANCY
BEES LAKES HABITAT RESTORATION PROJECT

90% DESIGN

BEES LAKES
KIOSK ELEVATIONS

Date	Project No.	Drawing No.	Issue
NOVEMBER, 2023	3223–10358905	A-24	X
Scale: 3/4" = 1'–0"	File Name: A–24.DWG		

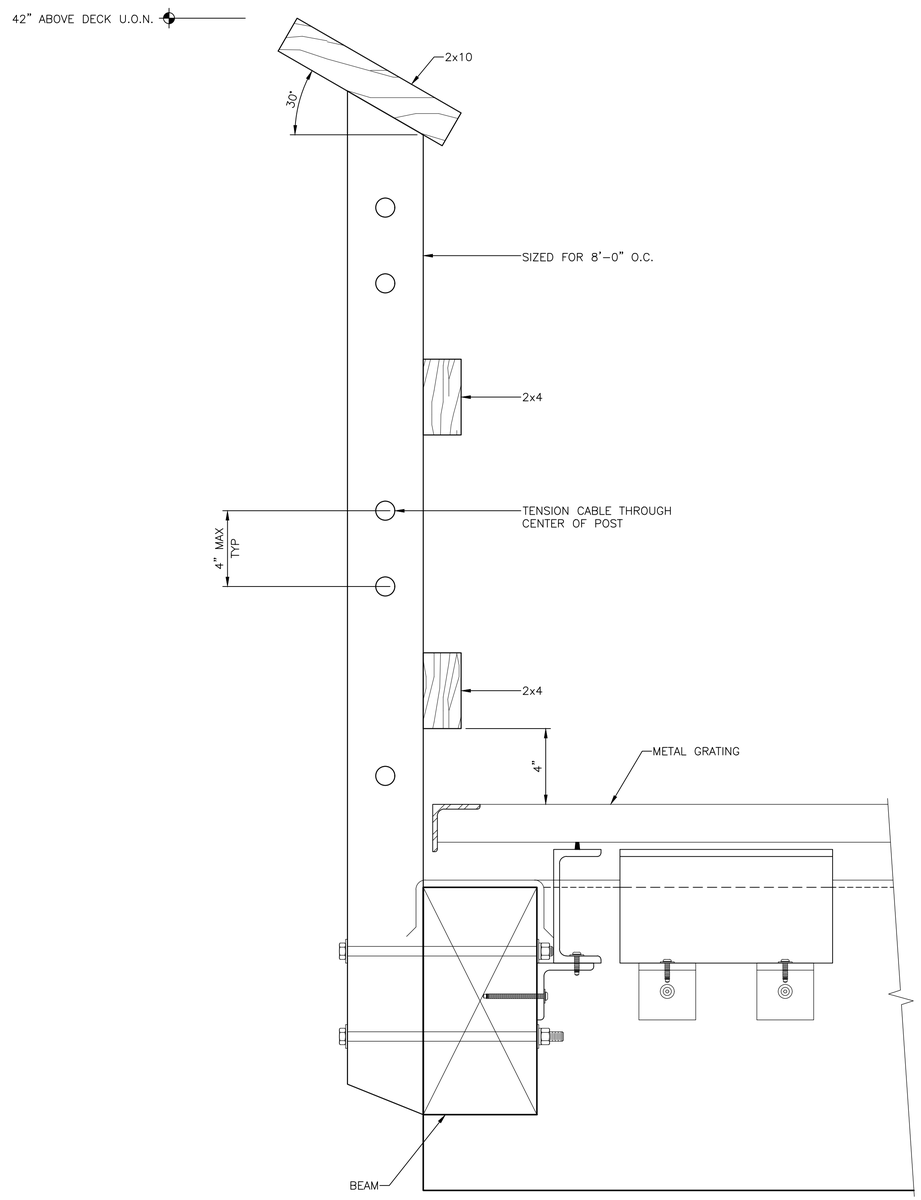

NOTE:

CORRESPONDS WITH
DETAIL B SHEET S-11.

GUARDRAIL DETAIL

1

3" = 1'-0"

90% DESIGN

Issue No.	Description	Date	Drwn.	Chkd.	Resp. Engr.	Proj. Mgr.

HORIZONTAL DATUM IS THE CALIFORNIA COORDINATE SYSTEM, ZONE 2 (NAD 83)

VERTICAL DATUM IS NAVD 88

EL NAVD 88 =
EL NGVD 29+2.6'

HDR Engineering, Inc.

BAR LENGTH ON ORIGINAL DRAWING EQUALS ONE INCH. ADJUST SCALE ACCORDINGLY.

Project Manager: K. JAMESON
Designed: M. LAMBERT
Designed: X
Checked: X
Drawn: M. MENDOZA

SACRAMENTO-SAN JOAQUIN DELTA CONSERVANCY
BEES LAKES HABITAT RESTORATION PROJECT

BEES LAKES
ARCHITECTURAL DETAILS I

Date	Project No.	Drawing No.	Issue
NOVEMBER, 2023	3223-10358905	A-30	X
Scale: 1/2" = 1'-0"	File Name: A-30.DWG		

C:\PWWORKING\WEST01\D2918499\A-30.DWG
November 21, 2023

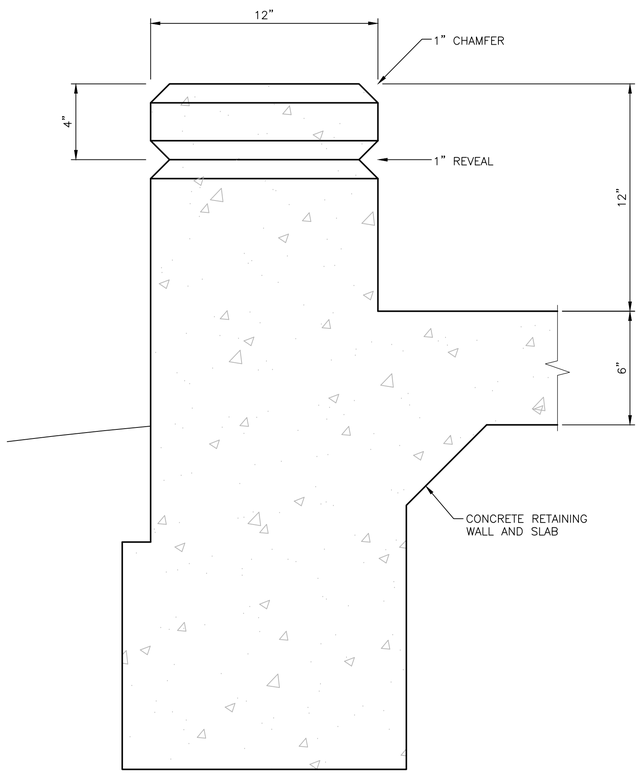

CURB DETAIL

1

3" = 1'-0"

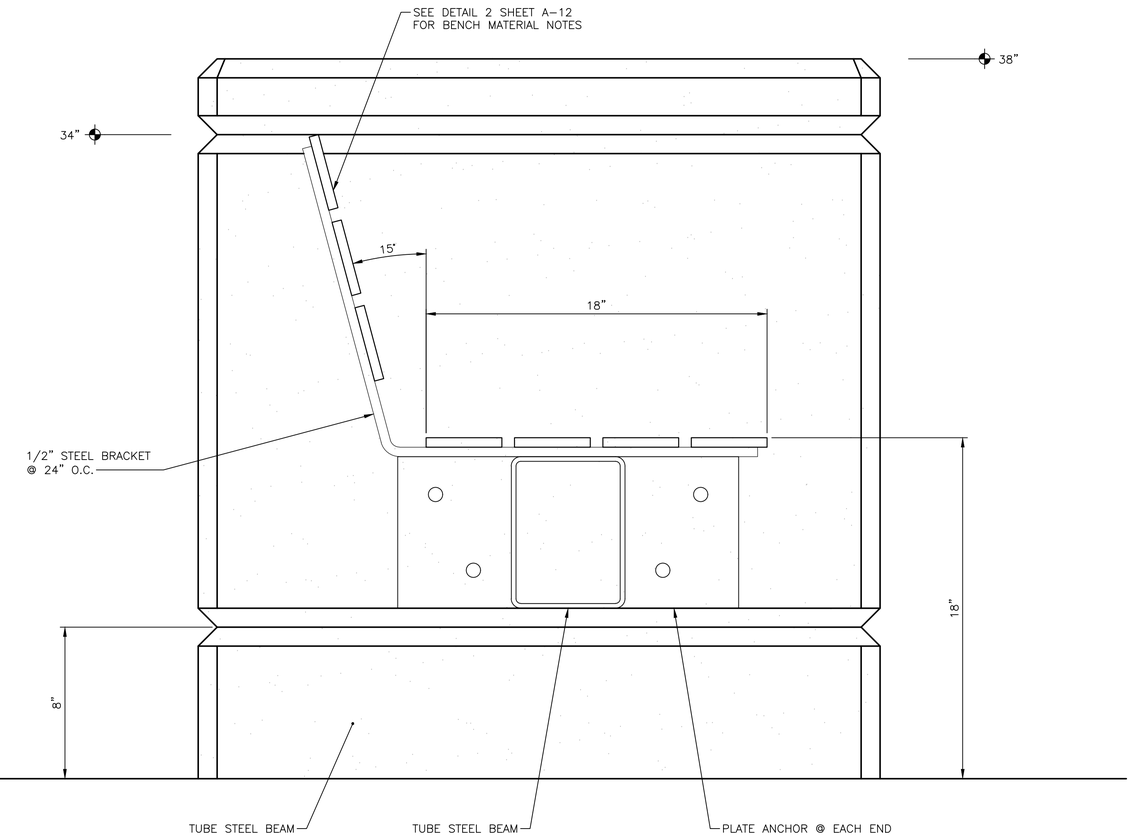

BENCH DETAIL

2

3" = 1'-0"

C:\PWWORKING\WEST01\D2918499\A-31.DWG
November 21, 2023

Issue No.	Description	Date	Drwn.	Chkd.	Resp. Engr.	Proj. Mgr.

HORIZONTAL DATUM IS THE CALIFORNIA COORDINATE SYSTEM, ZONE 2 (NAD 83)

VERTICAL DATUM IS NAVD 88

EL NAVD 88 =
EL NGVD 29+2.6'

HDR Engineering, Inc.

BAR LENGTH ON ORIGINAL DRAWING EQUALS ONE INCH. ADJUST SCALE ACCORDINGLY.

Project Manager: K. JAMESON
Designed: M. LAMBERT
Designed: X
Checked: X
Drawn: M. MENDOZA

SACRAMENTO-SAN JOAQUIN DELTA CONSERVANCY
BEES LAKES HABITAT RESTORATION PROJECT

90% DESIGN

BEES LAKES
ARCHITECTURAL DETAILS II

Date	Project No.	Drawing No.	Issue
NOVEMBER, 2023	3223-10358905	A-31	X
Scale: 1/2" = 1'-0"	File Name: A-31.DWG		

GENERAL STRUCTURAL NOTES (GSN)

GENERAL

G1 SCOPE
THE NOTES ON THIS SHEET AND THE STANDARD STRUCTURAL DETAILS ARE GENERAL AND APPLY TO THE ENTIRE PROJECT WHETHER SPECIFICALLY CALLED OUT OR NOT, EXCEPT WHERE THERE ARE SPECIFIC INDICATIONS TO THE CONTRARY ON STRUCTURAL SHEETS. IF THERE ARE QUESTIONS, THEY SHALL BE SUBMITTED TO THE STRUCTURAL ENGINEER AND ANSWERED IN WRITING PRIOR TO CONSTRUCTION.

G2 APPLICABLE SPECIFICATIONS AND CODES
A. CALIFORNIA BUILDING CODE 2022, WITH APPLICABLE EDITIONS OF THE CODE REFERENCED STANDARDS.
B. ASCE7–16
C. ACI–318–14
D. AISC 360 AND 341
E. NPS 2018
F. LOCAL JURISDICTION AMENDMENTS

G3 DESIGN CRITERIA
1. APPLIES TO ALL STRUCTURES (UNO)
A. DEAD LOAD:
1. ACTUAL TRIBUTARY STRUCTURE WEIGHT
2. SUPERIMPOSED DEAD LOAD: ACTUAL WT. OF ANY EQUIPMENT OR OTHER ATTACHMENT.
B. LIVE LOAD:
1. BOARDWALK AND RAMP: 100 PSF
C. WIND:
1. BASIC DESIGN WIND SPEED V_{UH} = 90 MPH
2. RISK CATEGORY: II
3. EXPOSURE: C

D. SEISMIC:
1. ABOVE GRADE STRUCTURES:
a. RISK CATEGORY: I FOR KIOSK AND II FOR OTHERS
b. IMPORTANCE FACTOR: 1.0
c. MAPPED SPECTRAL RESPONSE ACCELERATION, Ss= 0.603G
d. MAPPED SPECTRAL RESPONSE ACCELERATION, S1= 0.262G
e. SITE CLASS: C
f. SEISMIC DESIGN CATEGORY: D
g. BASIC SEISMIC FORCE RESITING SYSTEM SEE TABLE BELOW.
h. ANALYSIS PROCEDURE: EQUIVALENT LATERAL FORCE ANALYSIS.
i. DESIGN BASIC SHEAR: SEE TABLE BELOW.
j. SEISMIC RESPONSE COEFFICIENT: SEE TABLE BELOW
k. RESPONSED MODIFICATION FACTOR: SEE TABLE BELOW.
l. DESIGN SPECTRAL RESPONSE ACCELERATION, SDS = 0.507g
m. DESIGN SPECTRAL RESPONSE ACCELERATION SD1 = 0.262g

STRUCTURE	i. BASIC SEISMIC FORCE RESISTING SYSTEM:	k. DESIGN BASE SHEAR $V=W*C_S$	l. SEISMIC RESPONSE COEFFICIENT (C_S)	m. RESPONSE MODIFICATION FACTOR "R"
1. BOARDWALK	CANTILEVERED COLUMN SYSTEMS DETAILED TO CONFORM TO THE REQUIREMENTS FOR TIMBER FRAMES	8.5 kips PER BENT	1.679	1.5
2. VIEWING PLATFORM		70.0 kips		
3. KIOSK		1.30 kips		

E. SNOW LOAD: NOT APPLICABLE

G4 SAFETY
SAFETY AND STRUCTURE STABILITY DURING CONSTRUCTION ARE THE SOLE RESPONSIBILITY OF THE CONTRACTOR. STRUCTURES HAVE BEEN DESIGNED TO RESIST THE DESIGN LIVE LOADS ONLY AS A COMPLETED STRUCTURE.

G5 OPENINGS
OPENINGS FOR PIPES, DUCTS, CONDUITS, ETC. ARE NOT ALL SHOWN ON THE STRUCTURAL DRAWINGS. COORDINATE AND PROVIDE OPENINGS AS REQUIRED TO ACCOMMODATE ALL WORK SHOWN OR SPECIFIED IN THE CONTRACT DOCUMENTS AND OTHERWISE REQUIRED FOR THE FURNISHING OF A FUNCTIONALLY COMPLETE PROJECT. REINFORCE AROUND OPENINGS PER STANDARD STRUCTURAL DETAILS UNLESS OTHERWISE SHOWN.

G6 SPECIAL INSPECTIONS
SPECIAL INSPECTIONS ARE REQUIRED IN ACCORDANCE WITH CHAPTER 1 AND CHAPTER 17 OF THE CBC. PAYMENT FOR THESE INSPECTIONS IS NOT THE RESPONSIBILITY OF THE CONTRACTOR. CONTRACTOR SHALL PROVIDE FOR FULL ACCESS TO THE WORK BY THE SPECIAL INSPECTOR AND SHALL PROVIDE FOR THESE INSPECTIONS IN HIS CONSTRUCTION SCHEDULE IN ACCORDANCE WITH THE SPECIFICATIONS. A SPECIAL INSPECTION PLAN WILL BE SUBMITTED UNDER SEPARATE COVER WITH THE PERMIT APPLICATION.

G7 STANDARD DETAILS
THE STANDARD DETAILS DEPICT TYPICAL DETAILING TO BE USED ON THIS PROJECT. IF CONDITIONS ARE NOT EXPLICITLY SHOWN ON THE DRAWINGS THEY SHALL BE MADE SIMILAR TO THE STANDARD DETAILS. OBTAIN APPROVAL OF ENGINEER IN WRITING FOR SIMILAR CONDITIONS PRIOR TO CONSTRUCTION.

G8 THE CONTRACTOR SHALL FIELD VERIFY ALL DIMENSIONS AND ELEVATIONS OF EXISTING CONSTRUCTION AS REQUIRED TO COORDINATE NEW CONSTRUCTION. SUBMIT REQUIRED CHANGES FOR APPROVAL.

G9 CONTRACTOR TO SUBMIT FOR REVIEW ALL EQUIPMENT SIZES, OPERATING WEIGHTS, VIBRATION FORCES, SUPPORT LOCATIONS, ALONG WITH ANY FLOOR OPENINGS, NOTCHES, AND RECESSES REQUIRED BY SUCH EQUIPMENT. CONCRETE SUPPORT PADS AND/OR FRAMING REQUIRED TO SUPPORT SAID EQUIPMENT SHALL NOT BE FABRICATED AND PLACED UNTIL THE CONCRETE SUPPORT PADS AND/OR FRAMING IS APPROVED TO SUPPORT THE EQUIPMENT.

G10 THE FOLLOWING NON–CONTRACTUAL GEOTECHNICAL TECHNICAL MEMORANDEM WAS DEVELOPED FOR THIS PROJECT AND IS THE BASIS OF THIS STRUCTURAL DESIGN:
GEOTECHNICAL FIRM NAME: HDR
ADDRESS: 2365 IRON POINT ROAD SUITE 300, FOLSOM, CA 95630
REPORT DATE: FEBRUARY 27, 2020
ALLOWABLE [NET] SOIL BEARING:
CIP 15' DEEP 1' DIA. CONCRETE PILE BEARING CAPACITY = 100K
CIP 15' DEEP 2' DIA. CONCRETE PILE BEARING CAPACITY = 377K

G11 WHEN CONFLICT OCCURS BETWEEN STRUCTURAL DRAWINGS AND SPECIFICATION, THE MOST STRINGENT SHALL GOVERN.

CONCRETE:

C1 DESIGN STRENGTHS:
f'c = 4500 PSI
fy = 60,000 PSI

C2 CONCRETE COVER
UNLESS OTHERWISE NOTED, PROVIDE CONCRETE COVER FOR REINFORCING PER DETAIL 2/S–03

CONCRETE (CONT.):

C3 SEE SPECIFICATIONS FOR REINFORCING PLACEMENT REQUIREMENTS.

C4 REFER TO OTHER DISCIPLINE DRAWINGS PRIOR TO CONSTRUCTION FOR EMBEDDED ITEMS AND PENETRATIONS NOT SHOWN ON STRUCTURAL DRAWINGS. AS REQUIRED TO ACCOMMODATE ALL WORK SHOWN OR SPECIFIED IN THE CONTRACT DOCUMENTS AND OTHERWISE REQUIRED FOR THE FURNISHING OF A FUNCTIONALLY COMPLETE PROJECT. REINFORCE AROUND OPENINGS PER STANDARD STRUCTURAL DETAILS UNLESS OTHERWISE SHOWN.

C5 PROVIDE 3/4" CHAMFERS AT ALL EXPOSED EDGES AND 1/2" CHAMFERS AT JOINTS AS SHOWN. NOT ALL CHAMFERS MAY BE SHOWN ON DRAWINGS.

C6 FIELD ADJUST REINFORCING AT OPENINGS AND EMBEDDED ITEMS AS INDICATED.

C7 ANCHOR BOLTS NOT SPECIFIED BY ENGINEER SHALL BE DESIGNED AND CERTIFIED BY A REGISTERED PROFESSIONAL ENGINEER, RETAINED BY THE CONTRACTOR, IN ACCORDANCE WITH APPLICABLE PROJECT AND CODE REQUIREMENTS. SUBMIT AS A SHOP DRAWING FOR REVIEW AND APPROVAL BY THE ENGINEER. COORDINATE LOCATION, SIZE AND EMBEDMENT PRIOR TO CASTING CONCRETE.

C8 UNLESS SPECIFICALLY AUTHORIZED BY ENGINEER IN WRITING, ABSOLUTELY NO WELDING OF REINFORCING BARS OR TORCHING TO BEND REINFORCING BARS SHALL BE ALLOWED WITHOUT SPECIFIC APPROVAL FROM THE STRUCTURAL ENGINEER.

C9 CONTRACTOR SHALL SUBMIT A CONCRETE PLACEMENT PLAN PER SPECIFICATION IDENTIFYING JOINT TYPES, JOINT LOCATIONS AND CONCRETE PLACEMENT SEQUENCE.

C10 ALL CAST IN PLACE AND POST–INSTALLED ANCHORS INDICATED IN THE STRUCTURAL DOCUMENTS SHALL COMPLY WITH APPENDIX D OF ACI 318 AND CHAPTER 19 OF THE CBC. ALL EXPANSION AND ADHESIVE ANCHORS SHALL HAVE THE ICC REPORT SHOWING EQUIVALENT LOAD CAPACITY. SUBMIT AND INSTALL PER THE ICC EVALUATION REPORT.

C11 UNLESS OTHERWISE NOTED, ALL WALL REINFORCING BARS SHALL BE CONTINUOUS AROUND CORNERS AND THROUGH COLUMNS OR PILASTERS. REINFORCEMENT SHALL BE EXTENDED INTO CONNECTING WALLS, AND LAPPED ON THE OPPOSITE FACE OF THE CONNECTING WALLS, AS INDICATED ELSEWHERE ON THIS SHEET OR ON THE DRAWINGS. VERTICAL WALL BARS SHALL BE LAPPED WITH DOWELS FROM BASE SLABS AND EXTENDED INTO THE TOP FACE OF ROOF OR FLOOR SLABS AND LAPPED WITH TOP SLAB REINFORCEMENT. UNLESS INDICATED OTHERWISE, CONTRACTOR MAY SPLICE CONTINUOUS SLAB OR LONGITUDINAL BEAM BARS AT LOCATIONS OF IT'S CHOOSING, EXCEPT THAT TOP BAR SPLICES SHALL BE LOCATED AT MIDSPAN AND BOTTOM BAR SPLICES SHALL BE LOCATED AT SUPPORTS. ALL REINFORCEMENT BENDS AND LAPS, UNLESS OTHERWISE NOTED, SHALL SATISFY STANDARD DETAIL. 7/S–03

C12 UNLESS OTHERWISE NOTED, WALL VERTICAL REINFORCING LAYER SHALL BE CLOSEST TO WALL SURFACE, AND WALL HORIZONTAL REINFORCING LAYERS SHALL BE PLACED ATTACHED TO & BETWEEN VERTICAL LAYERS.

ALUMINUM:

A1 STRUCTURAL ALUMINUM YIELD STRENGTHS
STRUCTURAL ALUMINUM: Fy=35 KSI
STRUCTURAL ALUMINUM IS ALLOY 6061–T6 UNO

A2 DIMENSIONS:
TO CENTERLINES OF COLUMNS AND BEAMS, TOP SURFACES OF BEAMS AND TUBES AND BACKS OF CHANNELS AND ANGLES UNO.

A3 ELEVATIONS:
TOP OF ALUMINUM REFERS TO TOP SURFACE OR FLANGE OF MEMBER UNO.

A4 WHEN FILLET WELD SIZE IS NOT INDICATED, PROVIDE MAXIMUM WELD SIZE FOR THE MATERIAL THICKNESS IN ACCORDANCE WITH THE LATEST EDITION OF THE "ALUMINUM DESIGN MANUAL" BY THE ALUMINUM ASSOCIATION.

A5 ALUMINUM IN CONTACT WITH DISSIMILAR MATERIALS OR CONCRETE: CONTACT SURFACES SHALL BE PROVIDED WITH GALVANIC SEPARATION PER SPECIFICATIONS.

STEEL:

S1 DESIGN STRENGTHS:
WIDE FLANGE AND TEES: Fy=50 KSI
PIPES: Fy=35 KSI
STAINLESS STEEL Fy=33 KSI
HSS SECTIONS Fy=46 KSI
ALL OTHER PLATES AND SHAPES: Fy=36 KSI

S2 DIMENSIONS:
TO CENTERLINES OF COLUMNS AND BEAMS, TOP SURFACES OF BEAMS AND TUBES AND BACKS OF CHANNELS AND ANGLES UNO.

S3 ELEVATIONS:
TOP OF STEEL REFERS TO TOP SURFACE OF MEMBER OR FLANGE UNO.

S4 WHEN FILLET WELD SIZE IS NOT INDICATED, PROVIDE MAXIMUM WELD SIZE BASED ON MATERIAL THICKNESS IN ACCORDANCE WITH AISC SPECIFICATIONS.

S5 ALL BOLTED STRUCTURAL CONNECTIONS ARE BEARING TYPE CONNECTIONS UNLESS OTHERWISE SPECIFIED TO BE SLIP–CRITICAL. PROVIDE LOAD INDICATING WASHERS AT SLIP–CRITICAL CONNECTIONS.

S6 CONFORM TO AISC 360, STEEL CONSTRUCTION MANUAL AND AISC 341, SEISMIC DESIGN MANUAL.

STEEL(CONT.):

S7 ALL STEEL BEAMS SHALL RECEIVE STANDARD CAMBER PER THE SPECIFICATIONS UNLESS NOTED OTHERWISE ON THE PLANS. BEAMS REQUIRING SPECIAL CAMBER ARE DENOTED ON THE BEAMS SHOWN ON THE FRAMING PLANS. EXAMPLE: (+1/2") INDICATES ½".

S8 THE SEISMIC LOAD RESISTING SYSTEM (SLRS) IS DENOTED ON THE FRAMING PLANS AND FRAME ELEVATIONS. THE SLRS DESIGNATION INCLUDES THE MEMBER AND CONNECTIONS AT EACH END. FRAMES ARE DENOTED AS FOLLOWS:
A. MOMENT FRAME: (SLRS)
B. CONCENTRICALLY BRACED FRAME: (SLRS)
FOR SLRS SYSTEMS OR PARTS OF SYSTEMS THAT ARE NOT INCLUDED IN FRAMES, (SLRS) IS PLACED NEXT TO THE BEAM SIZE ON THE FRAMING PLAN (eg: ON A COLLECTOR ELEMENT (DRAG STRUT): MEMBER DESIGNATION (SLRS)

S9 GALVANIZING:
STRUCTURAL STEEL SHALL BE GALVANIZED IN ACCORDANCE WITH SPECIFICATIONS.

S10 STAINLESS STEEL:
STAINLESS STEEL CONSTRUCTION SHALL BE IN ACCORDANCE WITH AISI SPECIFICATIONS. UNLESS OTHERWISE NOTED, STEEL IN CONTACT WITH SEWAGE SHALL BE AISI TYPE 316 STAINLESS STEEL. ALL STEEL WITHIN ONE FOOT HORIZONTALLY OR VERTICALLY OF SEWAGE SHALL BE STAINLESS STEEL. WHERE NOT SPECIFICALLY INDICATED ON DRAWINGS OR IN ABOVE NOTE, STAINLESS STEEL SHALL BE AISI TYPE 304.

S11. ALL SHOP AND FIELD WELDS SHALL BE PREQUALIFIED WELDS. ANY WELDS BEYOND THE RANGE OR TOLERANCE OR REQUIREMENTS FOR PREQUALIFICATION SHALL BE QUALIFIED BY TEST PER AWS D1.1 SECTION 5 PART B. WELDS AT BASE METALS OVER 2" IN THICKNESS ARE NOT ALLOWED AS PREQUALIFIED WELD JOINTS WITHOUT TESTING.

S12. TO ASSURE THE PROPER AMPERAGE AND VOLTAGE OF THE WELDING PROCESS, THE USE OF A HAND HELD CALIBRATED AMP AND VOLT METER SHALL BE USED. THIS EQUIPMENT SHALL BE USED BY THE FABRICATOR, ERECTOR AND THE INSPECTORS. AMPERAGE AND VOLTAGE SHALL BE MEASURED NEAR THE ARC. TRAVEL SPEED AND ELECTRODE STICK OUT SHALL BE VERIFIED TO BE IN COMPLIANCE WITH THE APPROVED WPS.

S13. ALL COMPLETE JOINT PENETRATION (CP) GROOVE WELDS SHALL BE INSPECTED AND TESTED PER ENGINEER REQUIREMENTS.

S14. PREHEAT AND INTERPASS TEMPERATURES FOR THE LATERAL–FORCE–RESISTING ELEMENTS ONLY:

S14.1. THE PREHEAT TEMPERATURES AND CONDITIONS GIVEN IN A.W.S. D1.1–96, ANNEX XI, TABLE XI–2, SHOULD BE STRICTLY OBSERVED USING A MEDIUM RESTRAINT LEVEL AND A MINIMUM SUSCEPTIBILITY INDEX OF "D". EXCEPTION: PLATES 2" AND THICKER AND GROUP 4 AND 5 SHAPES SHALL BE PREHEATED TO 300 DEG. F.

S14.2. PREHEAT TEMPERATURES SHOULD BE MEASURED AT A DISTANCE FROM THE WELD EQUAL TO THE THICKNESS OF THE PART BEING WELDED, BUT NOT LESS THAN THREE INCHES, IN ANY DIRECTION INCLUDING THE THROUGH THICKNESS OF THE PIECE U.N.O. IN THE CONTRACT DOCUMENTS. WHERE PLATES ARE OF DIFFERENT THICKNESS, THE PRE–HEAT REQUIREMENT FOR THE THICKER PLATE SHALL GOVERN. MAINTENANCE OF THESE TEMPERATURES THROUGH THE EXECUTION OF THE WELD (I.E. THE INTERPASS TEMPERATURE) IS ESSENTIAL. MAXIMUM INTERPASS TEMPERATURES SHOULD BE LIMITED TO 550 DEGREES F FOR PRE–QUALIFIED W.P.S., FOR FRACTURE–CRITICAL APPLICATIONS. HIGHER INTERPASS TEMPERATURES COULD BE EMPLOYED IF THOSE HIGHER TEMPERATURE LIMITS ARE QUALIFIED BY TEST.

S15. NON–DESTRUCTIVE TESTING OF WELDED CONNECTIONS SHALL BE PERFORMED AT BRACING CONNECTION FILLET WELDS AND AT ALL FULL OR PARTIAL PENETRATION GROOVE WELDS DESIGNATED TO BE A PART OF THE LATERAL FORCE–RESISTING–SYSTEM:

S15.1. WELDED CONNECTIONS SHALL BE TESTED BY NON–DESTRUCTIVE METHODS FOR COMPLIANCE WITH IBC SECTION 2249 J2 OR 2251 J2. ULTRASONIC TESTING SHALL BE IN ACCORDANCE WITH AWS D1.1M ASTM E94 AND E99. AND ASME SECTION V. THIS TESTING SHALL BE PERFORMED BY AN APPROVED TESTING LABORATORY.

HEADED STUDS AND DEFORMED BAR ANCHORS

1. HEADED STUDS AND DEFORMED BAR ANCHORS SHALL BE ELECTRIC–ARC STUD WELDED PER MANUFACTURER'S RECOMMENDATIONS AND THE AWS CODE. FILLET WELDING SHALL NOT BE ALLOWED WITHOUT APPROVAL OF THE SEOR. WELDMENT SHALL BE IN SUCH A MANNER AS TO PROVIDE COMPLETE FUSION BETWEEN THE END OF THE STUD AND THE PLATE. THERE SHOULD NO POROSITY OR EVIDENCE OF LACK OF FUSION BETWEEN THE WELDED END OF THE STUD AND THE PLATE. THE STUD WILL DECREASE IN LENGTH DURING WELDING APPROXIMATELY 1/8" FOR 5/8" DIAMETER AND SMALLER, AND 3/16" FOR 5/8" DIAMETER AND LARGER STUDS.
2. HEADED STUDS SHALL BE TYPE B PER THE AWS CODE WITH A MINIMUM YIELD STRENGTH OF 50 KSI.
3. HEADED STUDS SHALL BE NELSON GRANULAR FLUX FILLED.
4. ANY SUBSTITUTIONS OF THE ANCHORS ABOVE MUST BE APPROVED BY CONTRACTING OFFICER BY MEANS OF A CHANGE ORDER.
5. STUDS SHALL BE MANUFACTURED OF C–1015 COLD ROLLED STEEL CONFORMING TO ASTM A–108–58–T.
6. DEFORMED BAR ANCHORS SHALL COMPLY WITH ASTM A–108 AND A–496 WITH A MINIMUM YIELD STRENGTH OF 70 KSI.
7. UNLESS NOTED OTHERWISE, DEFORMED BAR ANCHOR LENGTHS SHALL BE AS FOLLOWS:

BAR DIAMETER (IN)	EMBEDMENT (IN)
3/8	24
1/2	24
5/8	30

WOOD FRAMING NOTES:

1. BEAMS, JOISTS AND PURLINS SHALL ONLY BE CUT AS SHOWN ON THE DRAWINGS OR AS APPROVED BY THE ENGINEER–OF–RECORD. HOLES THROUGH THE MEMBER SHALL NOT EXCEED 1/6 THE DEPTH OF THE MEMBER IN SIZE AND SHALL BE LOCATED IN THE MIDDLE 1/3 OF THE MEMBER DEPTH. NOTCHES SHALL BE NO GREATER THAN 1/10 OF THE MEMBER DEPTH AND SHALL NOT BE LOCATED IN THE MIDDLE THIRD OF THE MEMBER SPAN. HOLES OR NOTCHES ARE NOT PERMITTED WITHIN 2 TIMES THE MEMBER DEPTH FROM ANY MEMBER SUPPORT. ADJACENT HOLES OR NOTCHES SHALL BE SPACED AT A DISTANCE NOT LESS THAN 1 1/2 X MEMBER DEPTH.

WOOD:

W1 STRUCTURAL LUMBER
ALL STRUCTURAL LUMBER SHALL BE DOUGLAS FIR–LARCH #1 AND BETTER, UNLESS NOTED OTHERWISE, AS FOLLOWS:

MEMBER TYPE	GRADE
2x, 3x STUDS	#1 & BTR
4x POSTS	#1 & BTR
6x POSTS, POSTS @ HOLDOWNS	SELECT STRUCTURAL
2x, 3x JOISTS, RAFTERS & PLATES	#1 & BTR
4x BEAMS & STRINGERS	#1 & BTR
6x BEAMS & STRINGERS	#1 & BTR
BLOCKING, MISC FRMG	#2

W2 ALL WOOD SHALL BE PRESSURE TREATED.

W3 PLYWOOD
PROVIDE 5 PLY APA RATED SHEATHING MARKED " STRUCTURAL–1", EXTERIOR EXPOSURE, CD GRADE. SPAN RATING SHALL BE 32/16 FOR 15/32" AND 40/20 FOR 19/32" THICK PLYWOOD.

W4 GENERAL NAILING SCHEDULE CONNECTION

1.	JOIST TO SILL OR GIRDER, TOENAIL	3–8d
2.	BRIDGING TO JOIST, TOENAIL EACH END	2–8d
3.	SOLE PLATE TO JOIST OR BLOCKING, TYPICAL FACE NAIL	16d AT 16" OC
	SOLE PLATE TO JOIST OR BLOCKING, AT BRACED WALL PANELS	3–16d PER 16"
4.	TOP PLATE TO STUD, END NAIL	
5.	STUD TO SOLE PLATE	4–8d, TOENAIL OR 2–16d, END NAIL
6.	DOUBLE STUDS, FACE NAIL	16d AT 24" OC
7.	DOUBLE TOP PLATES, TYPICAL FACE NAIL	16d AT 16" OC
	DOUBLE TOP PLATES, LAP SPLICE	16–10d @ 2X AND 16–16d @ 3X TOP PLATES EACH SIDE OF SPLICE, TYP.
8.	BLOCKING BETWEEN JOISTS OR RAFTERS TO TOP PLATE, TOENAIL	
9.	RIM JOIST TO TOP PLATE, TOENAIL	8d AT 6" OC
10.	TOP PLATES, LAPS AND INTERSECTIONS, FACE NAIL	
11.	CONTINUOUS HEADER, TWO PIECES	16d AT 16" (406mm) OC ALONG EACH EDGE
12.	CEILING JOISTS TO PLATE, TOENAIL	
13.	CONTINUOUS HEADER TO STUD, TOENAIL	
14.	CEILING JOISTS, LAPS OVER PARTITIONS, FACE NAIL	
15.	CEILING JOISTS TO PARALLEL RAFTERS, FACE NAIL	
16.	RAFTER TO PLATE, TOENAIL	3–8d EACH SIDE
17.	1" (25 mm) BRACE TO EACH STUD AND PLATE, FACE NAIL	
18.	BUILT–UP CORNER STUDS	16d AT 24" (610 mm) OC BOTTOM STAGGERED 2–20d
19.	BUILT–UP GIRDER AND BEAMS	20d AT 32" OC AT TOP AND AT ENDS AND AT EACH SPLICE
20.	WOOD STRUCTURAL PANELS, UNO	
	ROOF AND WALL SHEATHING (TO FRAMING):	
	1/2" AND LESS	8d (ROOF) OR 6d (WALL)
	19/32" – 3/4"	8d OR 6d (DEFORMED SHANK)
	7/8" – 1"	8d
21.	PANEL SIDING (TO FRAMING):	
	1/2" (13 mm) OR LESS	6d
	5/8" (16 mm)	8d

FOOTNOTES FOR GENERAL NAILING SCHEDULE

1. COMMON NAILS, GALVANIZED OR CEMENT COATED, SHALL BE USED EXCEPT WHERE OTHERWISE STATED.
2. PLYWOOD: PROVIDE AS MINIMUM, NAILS SPACED AT 6 INCHES ON CENTER AT EDGES, 12 INCHES AT INTERMEDIATE SUPPORTS EXCEPT 6 INCHES AT ALL SUPPORTS WHERE SPANS ARE 48 INCHES OR MORE UNLESS OTHERWISE STATED.

METAL CONNECTORS:

1. ALL METAL CONNECTORS SHOWN ON THESE DRAWINGS ARE BY SIMPSON COMPANY, OR PROVIDE APPROVED EQUAL.

90% DESIGN

Issue No.	Description	Date	Drwn.	Chkd.	Resp. Engr.	Proj. Mgr.
–	–	–	–	–	–	–

HORIZONTAL DATUM IS THE CALIFORNIA COORDINATE SYSTEM, ZONE 2 (NAD 83)

VERTICAL DATUM IS NAVD 88

EL NAVD 88 =
EL NGVD 29+2.6'

HDR Engineering, Inc.

BAR LENGTH ON ORIGINAL DRAWING EQUALS ONE INCH. ADJUST SCALE ACCORDINGLY.

Project Manager: K. JAMESON
Designed: Z. LI
Designed: X
Checked: J. MANISCALCO
Drawn: V. RUSSO

SACRAMENTO-SAN JOAQUIN DELTA CONSERVANCY
BEES LAKES HABITAT RESTORATION PROJECT

STRUCTURAL NOTES

Date	Project No.	Drawing No.	Issue
NOVEMBER, 2023	3223–10358905	S-01	X
Scale: NOT TO SCALE	File Name: S–01.DWG		

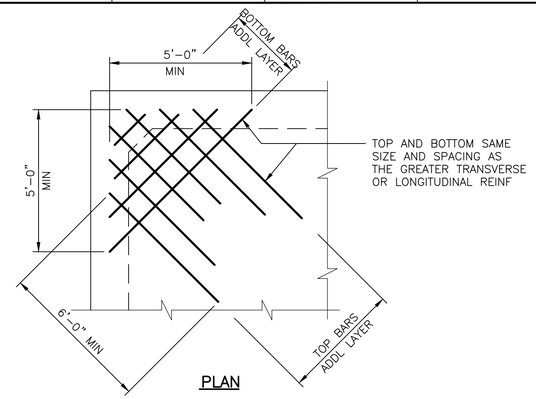

TYPICAL SLAB CORNER DETAIL (1)
NTS

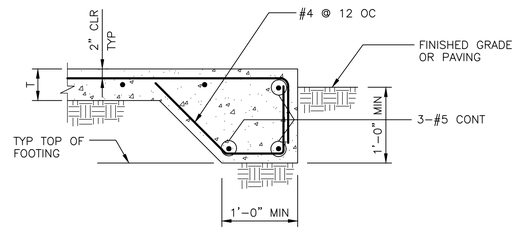

TYPICAL SLAB EDGE (2)
NTS

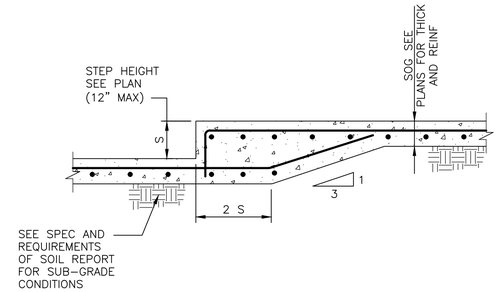

TYPICAL SLAB-ON-GRADE DEPRESSION (FOR ONE LAYER OF REBAR) (3)
NTS

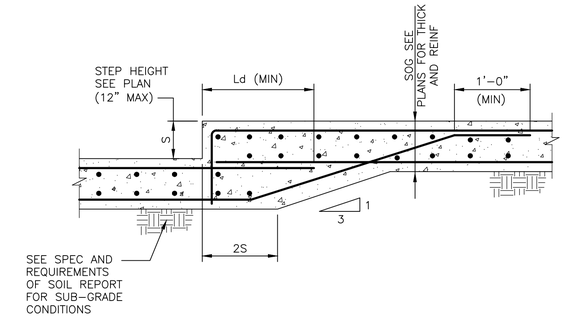

TYPICAL SLAB-ON-GRADE DEPRESSION (FOR TWO LAYERS OF REBAR) (4)
NTS

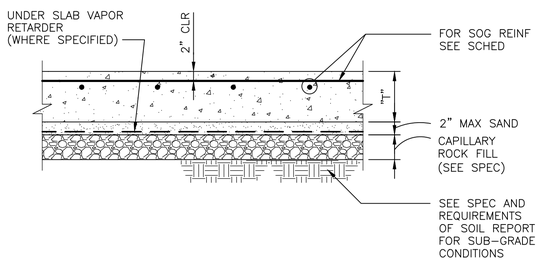

THICK "T"	REINFORCMENT
6"	#4 @ 12" EA WAY
8"	#5 @ 12" EA WAY

NOTE:
ELIMINATE 2" LAYER OF SAND WHERE UNDER SLAB VAPOR RETARDER IS NOT REQUIRED.

TYPICAL SLAB-ON-GRADE (5)
NTS

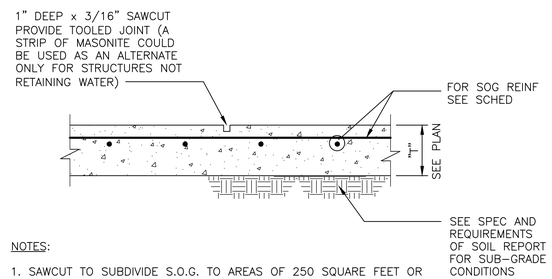

NOTES:

1. SAWCUT TO SUBDIVIDE S.O.G. TO AREAS OF 250 SQUARE FEET OR LESS. AREAS TO BE SQUARE OR APPROXIMATELY SQUARE.
2. SAWCUT AS SOON AS CONCRETE IS FIRM ENOUGH TO WALK ON BUT NO LATER THAN 24 HOURS AFTER POURING.

TYPICAL SLAB-ON-GRADE CONTROL JOINT (6)
NTS

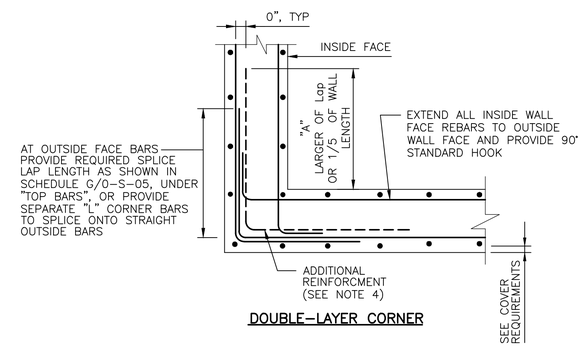

DOUBLE-LAYER CORNER

REINFORCING AT WALL CORNER (7)
NTS

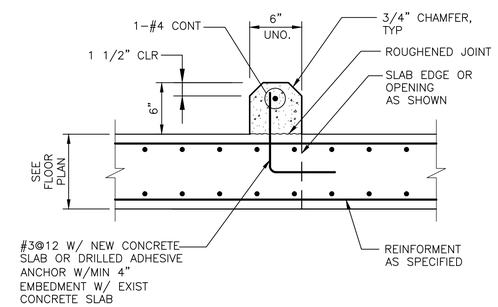

CONCRETE CURB (8)
NTS

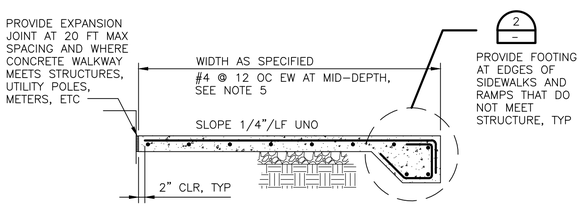

NOTES:

1. PROVIDE BROOM FINISH UNO PER THE REQUIREMENTS OF SPEC SECTION 03002.
2. PROVIDE TOOLED JOINTS AT 5 FOOT SPACING IN PERPENDICULAR DIRECTIONS.
3. PROVIDE 6" GRANULAR FILL UNDER CONCRETE SIDEWALKS AND LANDINGS, UNLESS OTHERWISE NOTED.
4. PROVIDE 12" GRANULAR FILL UNDER CONCRETE PAVEMENT AND RAMPS.
5. #5 @ 8" OC EW AT CONCRETE PAVEMENT AND RAMPS.
6. 8" THICKNESS AT CONCRETE PAVEMENT AND RAMPS.
7. LEAN CONCRETE WITH MINIMUM 28 DAY COMPRESSIVE STRENGTH F'c=3,000 PSI MAY BE USED AT CONCRETE SIDEWALKS AND LANDINGS ONLY. SEE SPECIFICATION FOR ADDITIONAL INFORMATION.

CONCRETE SIDEWALK AND RAMP DETAIL (9)
NTS

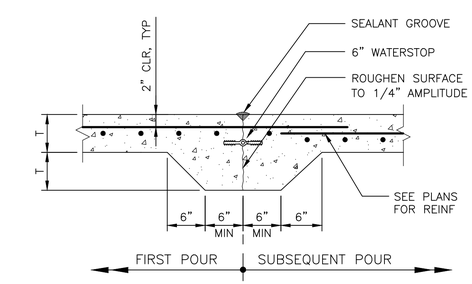

NOTE:
CONTRACTOR TO SUBMIT PROPOSED CONSTRUCTION JOINT LAYOUT (IF DIFFERENT FROM SHOWN ON FLOOR PLAN), FOR REVIEW AND APPROVAL BY ENGINEER OF RECORD PRIOR TO PLACING CONCRETE.

TYPICAL CONCRETE SLAB-ON-GRADE CONSTRUCTION JOINT DETAIL (<8" THICK) (10)
NTS

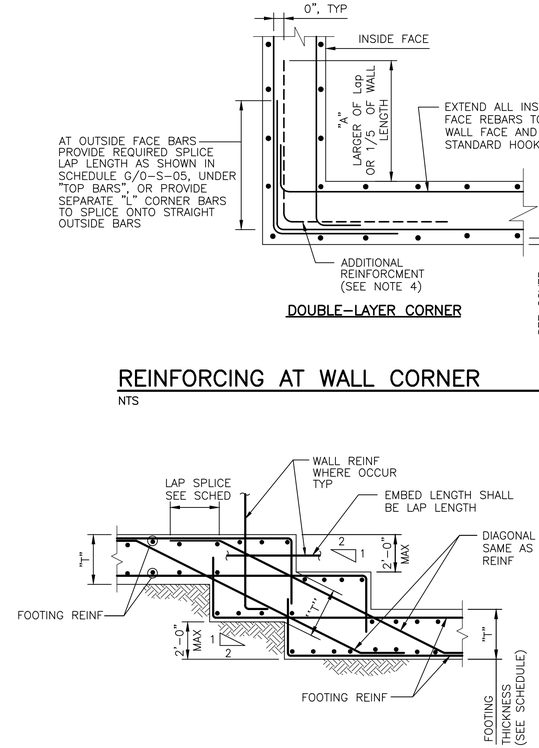

NOTE:

1. FOR FOOTING REINFORCEMENT AND FOOTING SIZE, SEE FOUNDATION PLAN, SECTIONS AND SCHEDULE.

TYPICAL STEPPED FOOTING DETAIL (11)
NTS

NOTES:

1. FOR WALLS, FORM ALL JOINT EDGES AT 3/4" CHAMFER.
2. FOR UNDER SIDE OF EXPOSED SLABS, FORM JOINT EDGES AT 1/2" CHAMFER.
3. FOR SLABS, PROVIDE 1/4" RADIUS TOOLED EDGES AT TOP SURFACE
4. USE SOIL-SIDE DETAIL AT UNDERSIDE OF SLABS ON GRADE ONLY. USE EXPOSED FACE DETAIL AT ALL OTHER LOCATIONS.
5. "W" = 1" WIDE UNLESS OTHERWISE INDICATED ON DRAWINGS.

EXPANSION JOINT NO BARS ACROSS (12)
NTS

90% DESIGN

Issue No.	Description	Date	Drwn.	Chkd.	Resp. Engr.	Proj. Mgr.

HORIZONTAL DATUM IS THE CALIFORNIA COORDINATE SYSTEM, ZONE 2 (NAD 83)

VERTICAL DATUM IS NAVD 88

EL NAVD 88 =
EL NGVD 29+2.6'

HDR Engineering, Inc.

BAR LENGTH ON ORIGINAL DRAWING EQUALS ONE INCH. ADJUST SCALE ACCORDINGLY.

Project Manager: K. JAMESON
Designed: Z. LI
Designed: X
Checked: J. MANISCALCO
Drawn: R. PRASAD

SACRAMENTO-SAN JOAQUIN DELTA CONSERVANCY
BEES LAKES HABITAT RESTORATION PROJECT

BEES LAKES

TYPICAL CONCRETE DETAILS

Date	Project No.	Drawing No.	Issue
NOVEMBER, 2023	3223-10358905	S-02	X
Scale: AS NOTED	File Name: S-02.DWG		

LOCATION	* MINIMUM COVER
UNFORMED SURFACES ADJACENT TO EARTH	3"
FORMED OR TOP SURFACES EXPOSED TO WEATHER OR SATURATED AIR, SUBMERGED OR IN CONTACT WITH EARTH:	2"
OTHER LOCATIONS:	
BARS IN BEAMS OR GIRDERS, INCLUDING STIRRUPS AND COLUMN SPIRALS OR TIES	1 1/2"
SLABS, WALLS AND JOINTS	
#9 AND LARGER	BAR DIA + 1/4"
#8 AND SMALLER	1 1/2"

* COVER FOR REINFORCING STEEL SHALL NOT BE LESS THAN THE MINIMUM GIVEN ABOVE (NO MINUS TOLERANCE) , AND SHALL NOT EXCEED THE MINIMUM BY MORE THAN 1/4 INCH WHERE THE CONCRETE THICKNESS IS 24" OR LESS, OR MORE THAN 1/2 INCH WHERE THE CONCRETE THICKNESS IS MORE THAN 24 INCHES.

REINFORCEMENT CONCRETE COVER (2)
NTS

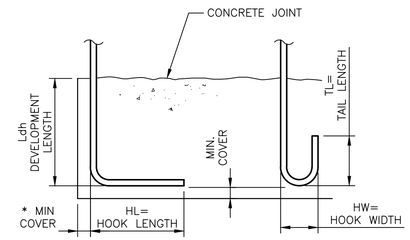

90° STD HOOK 180° STD HOOK

BAR SIZE GRADE 60	f'c=4000 psi & 4500 psi				f'c=5000 psi
	Ldh *	HL	HW	TL	Ldh *
#3	6"	6"	3"	4"	6"
#4	7"	8"	4"	4 1/2"	6"
#5	9"	10"	5"	5"	8"
#6	10"	1'-0"	6"	6"	9"
#7	1'-0"	1'-2"	7"	7"	11"
#8	1'-2"	1'-4"	8"	8"	1'-0"
#9	1'-3"	1'-7"	11 3/4"	10 1/2"	1'-2"
#10	1'-5"	1'-10"	1'-1 1/4"	11 1/2"	1'-3"
#11	1'-7"	2'-0"	1'-2 3/4"	1'-1"	1'-5"

* COMPLYING WITH MINIMUM COVER REQUIREMENTS OF ACI 318, 12.5.3.2. OTHERWISE Ldh MUST BE RE-CALCULATED.

REINFORCING HOOK SCHEDULE (3)
NTS

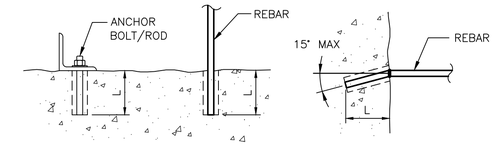

VERTICAL APPLICATION HORIZONTAL APPLICATION

ADHESIVE ANCHOR SCHEDULE			
REINFORCING BARS		ANCHOR BOLTS/RODS	
BAR SIZE	EMBED LENGTH (L)	DIA (IN)	EMBED LENGTH (L)
#3	4"	3/8"	5"
#4	5"	1/2"	6"
#5	6"	5/8"	7"
#6	7"	3/4"	8"
#7	8"	7/8"	9"
#8	9"	1"	10"
#9	10"		
#10	12"		

NOTES:
1. ADHESIVE TYPE IS SUBJECT TO APPROVAL OF THE ENGINEER OF RECORD.
2. EMBEDMENT LENGTHS SHOWN ARE MINIMUM. PROVIDE MANUFACTURER'S RECOMMENDATIONS FOR INSTALLATION.

ADHESIVE ANCHOR DETAILS & SCHEDULE (4)
NTS

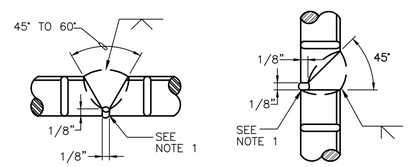

HORIZONTAL POSITION – A VERTICAL POSITION – B

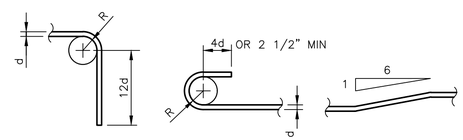

90° BEND 180° BEND MAX OFFSET BEND

MINIMUM LAP SPLICE LENGTHS f'c = 4000 psi & 4500 psi, fy = 60.0 ksi					
BAR	* MIN BAR SPACING	LAPS FOR BARS SPACED GREATER THAN MIN BAR SPACING		LAPS FOR BARS SPACED CLOSER THAN MIN BAR SPACING	
		VERTICAL	OTHER	VERTICAL	OTHER
#3	3"	1'-4"	1'-6"	1'-4"	1'-6"
#4	3"	1'-7"	2'-0"	1'-8"	2'-2"
#5	3"	1'-11"	2'-6"	2'-7"	3'-4"
#6	4"	2'-4"	3'-0"	3'-8"	4'-9"
#7	4"	3'-6"	4'-6"	4'-11"	6'-5"
#8	4"	4'-7"	5'-11"	6'-6"	8'-6"
#9	4 1/2"	5'-9"	7'-6"	8'-3"	10'-9"
#10	5"	7'-4"	9'-6"	10'-6"	13'-7"
#11	5 5/8"	9'-0"	11'-8"	12'-10"	16'-8"

NOTES:
1. ALL REBAR SPLICE LENGTHS SHALL BE AS SHOWN UNDER HEADING "VERTICAL" EXCEPT IF SPLICED BARS ARE HORIZONTAL BARS WITH 12" OR MORE CONCRETE BELOW. THEN SPLICE LENGTH SHALL BE AS SHOWN UNDER HEADING "OTHER".
2. *AT SPLICES THE BAR SPACING IS THE CENTER TO CENTER DISTANCE BETWEEN ADJACENT REBARS.
3. ALL SPLICES SHALL BE CONTACT SPLICES AND WIRED TOGETHER.
4. NO WELDED OR MECHANICAL SPLICES ARE PERMITTED UNLESS INDICATED OTHERWISE.
5. UNLESS OTHERWISE SHOWN, SPLICES FOR BOTTOM REINFORCING BARS IN BEAMS AND SLABS SHALL BE CENTERED OVER THE SUPPORTS. SPLICES FOR TOP REINFORCING BARS SHALL BE LOCATED ON CENTERLINE OF SPAN.

CONCRETE REINFORCING LAP SPLICE SCHEDULE (7)
NO SCALE

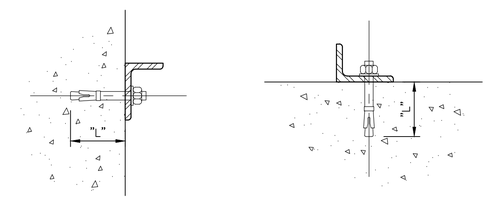

HORIZONTAL APPLICATION VERTICAL APPLICATION

EXPANSION ANCHOR SCHEDULE	
BOLT SIZE DIAMETER (IN)	EMBED LENGTH "L" (IN)
3/8	4
1/2	4
5/8	5
3/4	6
1	8

NOTES:
1. MINIMUM EMBEDMENT IS MEASURED FROM CONCRETE SURFACE TO FAR END OF WEDGES.
2. ALL EMBEDMENTS SHALL BE PER SCHEDULE ABOVE, UNLESS NOTED OTHERWISE.

EXPANSION ANCHOR DETAILS & SCHEDULE (8)
NO SCALE

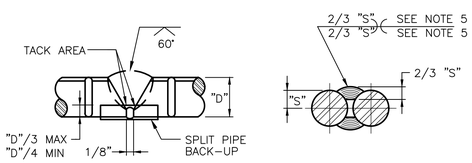

HORIZONTAL AND VERTICAL POSITION – C HORIZONTAL AND VERTICAL POSITION – D

NOTES:
1. CHIP, GRIND, OR GOUGE TO SOUND METAL BEFORE WELDING OTHER SIDE.
2. USE DETAIL A & B FOR #9 & LARGER BARS. USE DETAIL C FOR #8 & SMALLER BARS. USE DETAIL D FOR #6 & SMALLER BARS.
3. E 90 ELECTRODE FOR GRADE 60.
4. SEE AWS D1.4 FOR WELDING PROCESS, PREHEAT REQUIREMENTS, AND OTHER DETAILS. SUBMIT WELDING PROCEDURE PER AWS.
5. 1 1/2" FOR #3 AND #4 BARS; 2" FOR #5 BARS; AND 2 1/2" FOR #6 BARS.

WELDED SPLICE OF REINFORCING BARS (5)
NTS

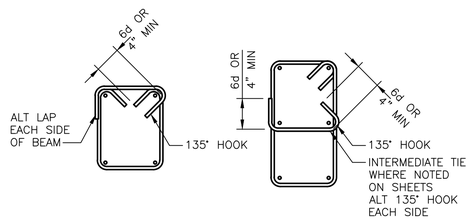

TYP. STIRRUP TYP. COLUMN TIE OR CLOSED STIRRUP

BAR SIZE	R
#3 TIES & STIRRUPS	2d
#4–#8	3d
#9–#11	4d
#14–#18	5d

TYPICAL STIRRUPS & TIES (6)
NTS

Issue No.	Description	Date	Drwn.	Chkd.	Resp. Engr.	Proj. Mgr.

HORIZONTAL DATUM IS THE CALIFORNIA COORDINATE SYSTEM, ZONE 2 (NAD 83)

VERTICAL DATUM IS NAVD 88

EL NAVD 88 =
EL NGVD 29+2.6'

HDR Engineering, Inc.

BAR LENGTH ON ORIGINAL DRAWING EQUALS ONE INCH. ADJUST SCALE ACCORDINGLY.

Project Manager: K. JAMESON
Designed: Z. LI
Designed: X
Checked: J. MANISCALCO
Drawn: R. PRASAD

SACRAMENTO-SAN JOAQUIN DELTA CONSERVANCY
BEES LAKES HABITAT RESTORATION PROJECT

90% DESIGN

BEES LAKES

TYPICAL CONCRETE REINFORCING DETAILS

Date	Project No.	Drawing No.	Issue
NOVEMBER, 2023	3223–10358905	S-03	X
Scale: AS NOTED	File Name: S–03.DWG		

C:\PWWORKING\WEST01\D2918499\S-03.DWG
December 6, 2023

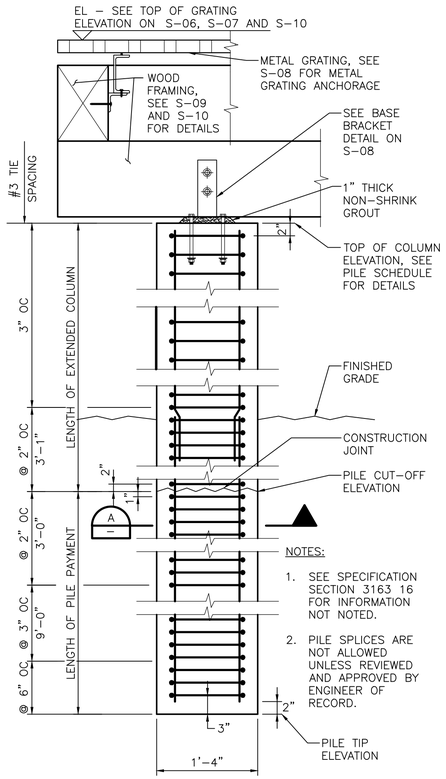

NOTES:

1. SEE SPECIFICATION SECTION 3163 16 FOR INFORMATION NOT NOTED.
2. PILE SPLICES ARE NOT ALLOWED UNLESS REVIEWED AND APPROVED BY ENGINEER OF RECORD.

TYPICAL CONCRETE PILE WITH EXTENDED COLUMN DETAIL

1 / –

NTS (ELEVATED TRAIL PILES SHOWN, VIEWING PLATFORM PILES UNDER GRATING SIM)

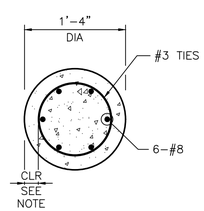

NOTE:
CLEARANCE IS 3" FOR PILES AND 2" FOR EXTENDED COLUMNS.

TYPICAL PILE/COLUMN SECTION

A / –

NTS

PILE SCHEDULE – ELEVATED TRAILS

LOCATION	STATION FT	TIP ELEVATION FT	CUT-OFF ELEVATION FT	PILE #	PILE LENGTH FT	TOP-OF-COLUMN/ ABUTMENT ELEVATION FT
BEES LAKES – TRAIL 1	1+77.53	1.3	16.3	P-1*	15.00'	23.57
BEES LAKES – TRAIL 1	1+90	7.5	17.5	P-2*	10.00'	22.20
BEES LAKES – TRAIL 1	2+00	6.2	16.2	P-3*	10.00'	21.86
BEES LAKES – TRAIL 1	2+10	5.1	15.1	P-4*	10.00'	21.52
BEES LAKES – TRAIL 1	2+20	3.6	13.6	P-5*	10.00'	21.17
BEES LAKES – TRAIL 1	2+30	2.5	12.5	P-6*	10.00'	20.83
BEES LAKES – TRAIL 1	2+40	1.3	11.3	P-7*	10.00'	20.49
BEES LAKES – TRAIL 1	2+50	0.2	10.2	P-8*	10.00'	20.14
BEES LAKES – TRAIL 1	2+60	-0.2	9.8	P-9*	10.00'	19.80
BEES LAKES – TRAIL 1	2+70	0.1	10.1	P-10*	10.00'	19.46
BEES LAKES – TRAIL 1	2+80	0.9	10.9	P-11*	10.00'	19.11
BEES LAKES – TRAIL 1	2+90	1.9	11.9	P-12*	10.00'	18.77
BEES LAKES – TRAIL 1	3+00	2.7	12.7	P-13*	10.00'	18.43
BEES LAKES – TRAIL 1	3+10	3.6	13.6	P-14*	10.00'	18.08
BEES LAKES – TRAIL 1	3+20	4.7	14.7	P-15*	10.00'	17.74
BEES LAKES – TRAIL 1	3+26.75	-2.8	12.3	P-16*	15.00'	18.59
BEES LAKES – TRAIL 2	0+61.33	3.7500	18.7500	P-17*	15.00'	25.56
BEES LAKES – TRAIL 2	0+70	9.3167	19.3167	P-18*	10.00'	24.21
BEES LAKES – TRAIL 2	0+80	8.4167	18.4167	P-19*	10.00'	23.72
BEES LAKES – TRAIL 2	0+90	7.0167	17.0167	P-20*	10.00'	23.24
BEES LAKES – TRAIL 2	1+00	4.8167	14.8167	P-21*	10.00'	22.76
BEES LAKES – TRAIL 2	1+10	3.3167	13.3167	P-22*	10.00'	22.27
BEES LAKES – TRAIL 2	1+20	2.1167	12.1167	P-23*	10.00'	21.79
BEES LAKES – TRAIL 2	1+30	1.2167	11.2167	P-24*	10.00'	21.30
BEES LAKES – TRAIL 2	1+40	1.1167	11.1167	P-25*	10.00'	20.82
BEES LAKES – TRAIL 2	1+50	0.9167	10.9167	P-26*	10.00'	20.34
BEES LAKES – TRAIL 2	1+60	0.2167	10.2167	P-27*	10.00'	19.85
BEES LAKES – TRAIL 2	1+70	-0.7833	9.2167	P-28*	10.00'	19.37
BEES LAKES – TRAIL 2	1+80	-1.2833	8.7167	P-29*	10.00'	18.89
BEES LAKES – TRAIL 2	1+90	-1.3833	8.6167	P-30*	10.00'	18.40
BEES LAKES – TRAIL 2	2+00	-1.3833	8.6167	P-31*	10.00'	17.92
BEES LAKES – TRAIL 2	2+10	-1.0833	8.9167	P-32*	10.00'	17.43
BEES LAKES – TRAIL 2	2+20	-0.1833	9.8167	P-33*	10.00'	16.95
BEES LAKES – TRAIL 2	2+30	1.3167	11.3167	P-34*	10.00'	16.47
BEES LAKES – TRAIL 2	2+40	2.7167	12.7167	P-35*	10.00'	15.98
BEES LAKES – TRAIL 2	2+46.60	-3.7500	11.2500	P-36*	15.00'	16.62

* REPRESENTS A PAIR OF PILES WITH IDENTICAL DIMENSIONS

PILE SCHEDULE – VIEWING PLATFORMS

LOCATION	EASTING FT	NORTHING FT	TIP ELEVATION FT	CUT-OFF ELEVATION FT	PILE #	PILE LENGTH FT	TOP-OF-COLUMN/ WALL ELEVATION FT
VIEW PLATFORM (PRIMARY)	6697235.55	1956864.65	-1.72	12.28	P-1	14'-0"	16.43
VIEW PLATFORM (PRIMARY)	6697233.99	1956871.67	-5.09	8.91	P-2	14'-0"	16.43
VIEW PLATFORM (PRIMARY)	6697234.31	1956878.84	-6.52	7.48	P-3	14'-0"	16.43
VIEW PLATFORM (PRIMARY)	6697236.46	1956885.68	-7.63	6.37	P-4	14'-0"	16.43
VIEW PLATFORM (PRIMARY)	6697240.34	1956891.71	-8.70	5.30	P-5	14'-0"	16.43
VIEW PLATFORM (PRIMARY)	6697245.61	1956896.58	-9.25	4.75	P-6	14'-0"	16.43
VIEW PLATFORM (PRIMARY)	6697252.00	1956899.89	-9.20	4.80	P-7	14'-0"	16.43
VIEW PLATFORM (PRIMARY)	6697258.99	1956901.45	-8.14	5.86	P-8	14'-0"	16.43
VIEW PLATFORM (PRIMARY)	6697266.16	1956901.14	-6.58	7.42	P-9	14'-0"	16.43
VIEW PLATFORM (PRIMARY)	6697273.01	1956898.98	-5.75	8.25	P-10	14'-0"	16.43
VIEW PLATFORM (PRIMARY)	6697279.06	1956895.13	-3.94	10.06	P-11	14'-0"	16.43
VIEW PLATFORM (PRIMARY)	6697283.91	1956889.83	-0.60	13.40	P-12	14'-0"	16.43
VIEW PLATFORM (PRIMARY)	6697245.45	1956872.66	-3.11	10.89	P-13	14'-0"	16.43
VIEW PLATFORM (PRIMARY)	6697246.13	1956878.87	-5.53	8.47	P-14	14'-0"	16.26
VIEW PLATFORM (PRIMARY)	6697249.13	1956884.34	-5.90	8.10	P-15	14'-0"	16.43
VIEW PLATFORM (PRIMARY)	6697254.01	1956888.24	1.01	15.01	P-16	14'-0"	16.43
VIEW PLATFORM (PRIMARY)	6697260.01	1956889.99	-5.76	8.24	P-17	14'-0"	16.43
VIEW PLATFORM (PRIMARY)	6697266.21	1956889.30	-4.97	9.03	P-18	14'-0"	16.26
VIEW PLATFORM (PRIMARY)	6697271.67	1956886.32	-2.30	11.70	P-19	14'-0"	16.43
VIEW PLATFORM (PRIMARY)	6697254.64	1956876.18	-2.09	11.91	P-20	14'-0"	16.26
VIEW PLATFORM (PRIMARY)	6697263.51	1956880.80	-1.86	12.14	P-21	14'-0"	16.26
VIEW PLATFORM (PRIMARY)	6697237.09	1956860.14	1.50	15.50	P-22	14'-0"	19.63
VIEW PLATFORM (PRIMARY)	6697243.30	1956863.37	1.50	15.50	P-23	14'-0"	19.63
VIEW PLATFORM (PRIMARY)	6697249.50	1956866.60	1.50	15.50	P-24	14'-0"	19.63
VIEW PLATFORM (PRIMARY)	6697255.70	1956869.83	1.50	15.50	P-25	14'-0"	19.63
VIEW PLATFORM (PRIMARY)	6697261.91	1956873.06	1.50	15.50	P-26	14'-0"	19.63
VIEW PLATFORM (PRIMARY)	6697268.11	1956876.29	1.50	15.50	P-27	14'-0"	19.63
VIEW PLATFORM (PRIMARY)	6697274.31	1956879.52	1.50	15.50	P-28	14'-0"	19.63
VIEW PLATFORM (PRIMARY)	6697280.51	1956882.75	1.50	15.50	P-29	14'-0"	19.63
VIEW PLATFORM (PRIMARY)	6697286.72	1956885.98	1.50	15.50	P-30	14'-0"	19.63
VIEW PLATFORM (SECONDARY)	6698055.23	1957297.67	-3.84	10.16	P-1	14'-0"	15.93
VIEW PLATFORM (SECONDARY)	6698053.67	1957297.67	-5.13	8.87	P-2	14'-0"	15.93
VIEW PLATFORM (SECONDARY)	6698053.99	1957304.85	-7.09	6.91	P-3	14'-0"	15.93
VIEW PLATFORM (SECONDARY)	6698056.14	1957311.68	-8.69	5.31	P-4	14'-0"	15.93
VIEW PLATFORM (SECONDARY)	6698060.01	1957317.74	-9.98	4.02	P-5	14'-0"	15.93
VIEW PLATFORM (SECONDARY)	6698065.29	1957322.59	-10.43	3.57	P-6	14'-0"	15.93
VIEW PLATFORM (SECONDARY)	6698071.68	1957325.90	-10.33	3.67	P-7	14'-0"	15.93
VIEW PLATFORM (SECONDARY)	6698078.67	1957327.46	-9.64	4.36	P-8	14'-0"	15.93
VIEW PLATFORM (SECONDARY)	6698085.84	1957327.15	-8.15	5.85	P-9	14'-0"	15.93
VIEW PLATFORM (SECONDARY)	6698092.69	1957324.99	-6.30	7.70	P-10	14'-0"	15.93
VIEW PLATFORM (SECONDARY)	6698098.74	1957321.13	-5.22	8.78	P-11	14'-0"	15.93
VIEW PLATFORM (SECONDARY)	6698103.59	1957315.84	-3.67	10.33	P-12	14'-0"	15.93
VIEW PLATFORM (SECONDARY)	6698065.13	1957298.67	-3.93	10.07	P-13	14'-0"	15.93
VIEW PLATFORM (SECONDARY)	6698065.81	1957304.87	-5.43	8.57	P-14	14'-0"	15.76
VIEW PLATFORM (SECONDARY)	6698068.81	1957310.35	-6.31	7.69	P-15	14'-0"	15.93
VIEW PLATFORM (SECONDARY)	6698073.69	1957314.25	-6.45	7.55	P-16	14'-0"	15.93
VIEW PLATFORM (SECONDARY)	6698079.69	1957315.99	-6.28	7.72	P-17	14'-0"	15.93
VIEW PLATFORM (SECONDARY)	6698085.89	1957315.31	-5.44	8.56	P-18	14'-0"	15.76
VIEW PLATFORM (SECONDARY)	6698091.35	1957312.32	-3.84	10.16	P-19	14'-0"	15.93
VIEW PLATFORM (SECONDARY)	6698074.32	1957302.19	-3.81	10.19	P-20	14'-0"	15.76
VIEW PLATFORM (SECONDARY)	6698083.19	1957306.81	-3.77	10.23	P-21	14'-0"	15.76
VIEW PLATFORM (SECONDARY)	6698056.77	1957286.14	-1.25	12.75	P-22	14'-0"	19.13
VIEW PLATFORM (SECONDARY)	6698062.98	1957289.38	-1.25	12.75	P-23	14'-0"	19.13
VIEW PLATFORM (SECONDARY)	6698069.18	1957292.61	-1.25	12.75	P-24	14'-0"	19.13
VIEW PLATFORM (SECONDARY)	6698075.38	1957295.84	-1.25	12.75	P-25	14'-0"	19.13
VIEW PLATFORM (SECONDARY)	6698081.59	1957299.07	-1.25	12.75	P-26	14'-0"	19.13
VIEW PLATFORM (SECONDARY)	6698087.79	1957302.30	-1.25	12.75	P-27	14'-0"	19.13
VIEW PLATFORM (SECONDARY)	6698093.99	1957305.52	-1.25	12.75	P-28	14'-0"	19.13
VIEW PLATFORM (SECONDARY)	6698100.19	1957308.75	-1.25	12.75	P-29	14'-0"	19.13
VIEW PLATFORM (SECONDARY)	6698106.40	1957311.99	-1.25	12.75	P-30	14'-0"	19.13

90% DESIGN

Issue No.	Description	Date	Drwn.	Chkd.	Resp. Engr.	Proj. Mgr.

HORIZONTAL DATUM IS THE CALIFORNIA COORDINATE SYSTEM, ZONE 2 (NAD 83)

VERTICAL DATUM IS NAVD 88

EL NAVD 88 =
EL NGVD 29+2.6'

HDR Engineering, Inc.

BAR LENGTH ON ORIGINAL DRAWING EQUALS ONE INCH. ADJUST SCALE ACCORDINGLY.

Project Manager: K. JAMESON
Designed: Z. LI
Designed: X
Checked: J. MANISCALCO
Drawn: R. PRASAD

SACRAMENTO-SAN JOAQUIN DELTA CONSERVANCY
BEES LAKES HABITAT RESTORATION PROJECT

BEES LAKES

CONCRETE PILE TYPICAL DETAILS / SCHEDULE

Date	Project No.	Drawing No.	Issue
NOVEMBER, 2023	3223-10358905	S-04	X
Scale: AS NOTED	File Name: S-04.dwg		

C:\PWWORKING\WEST01\D2918499\S-04.DWG
December 6, 2023

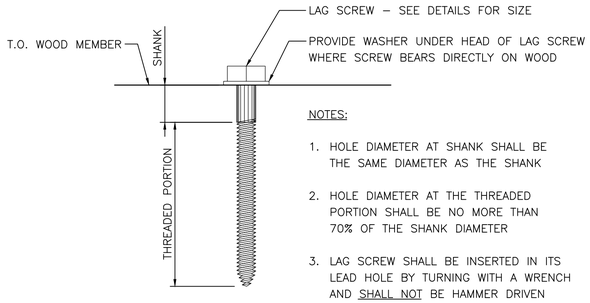

NOTES:

1. HOLE DIAMETER AT SHANK SHALL BE THE SAME DIAMETER AS THE SHANK
2. HOLE DIAMETER AT THE THREADED PORTION SHALL BE NO MORE THAN 70% OF THE SHANK DIAMETER
3. LAG SCREW SHALL BE INSERTED IN ITS LEAD HOLE BY TURNING WITH A WRENCH AND SHALL NOT BE HAMMER DRIVEN
4. LUBRICANT SHALL BE USED TO EASE INSTALLATION OF SCREW INTO LEAD HOLE

TYPICAL LAG SCREW LEAD HOLE DETAIL

1 / –

NTS

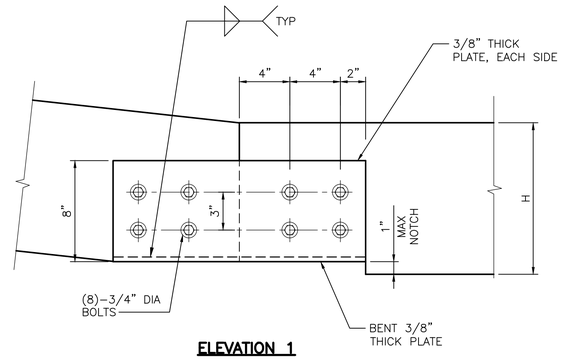

ELEVATION 1

AT GRADE BREAK

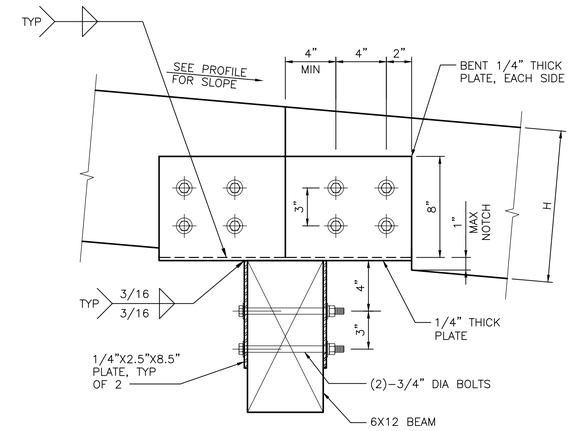

ELEVATION 2

SPLICE AT SUPPORT

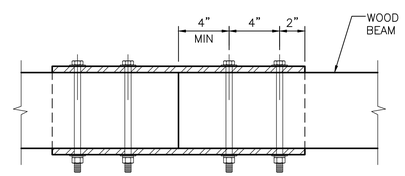

PLAN 1

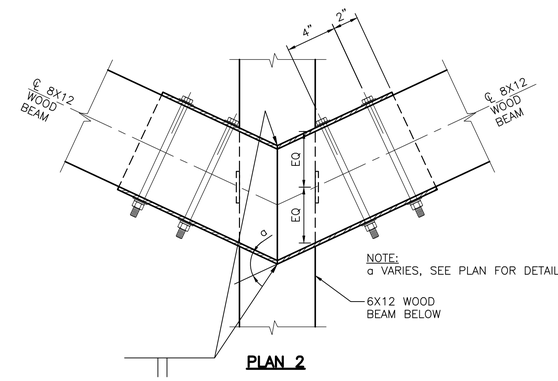

PLAN 2

WOOD CONNECTION DETAILS

2 / –

NTS

C:\PWWORKING\WESTO1\D2918499\S-05.DWG
December 6, 2023

Issue No.	Description	Date	Drwn.	Chkd.	Resp. Engr.	Proj. Mgr.

HORIZONTAL DATUM IS THE CALIFORNIA COORDINATE SYSTEM, ZONE 2 (NAD 83)

VERTICAL DATUM IS NAVD 88

EL NAVD 88 =
EL NGVD 29+2.6'

HDR Engineering, Inc.

BAR LENGTH ON ORIGINAL DRAWING EQUALS ONE INCH. ADJUST SCALE ACCORDINGLY.

Project Manager: K. JAMESON
Designed: Z. LI
Designed: X
Checked: J. MANISCALCO
Drawn: R. PRASAD

SACRAMENTO-SAN JOAQUIN DELTA CONSERVANCY
BEES LAKES HABITAT RESTORATION PROJECT

90% DESIGN

BEES LAKES

WOOD FRAMING NOTES AND DETAILS

Date	Project No.	Drawing No.	Issue
NOVEMBER, 2023	3223–10358905	S-05	X
Scale: AS NOTED	File Name: S–05.DWG		

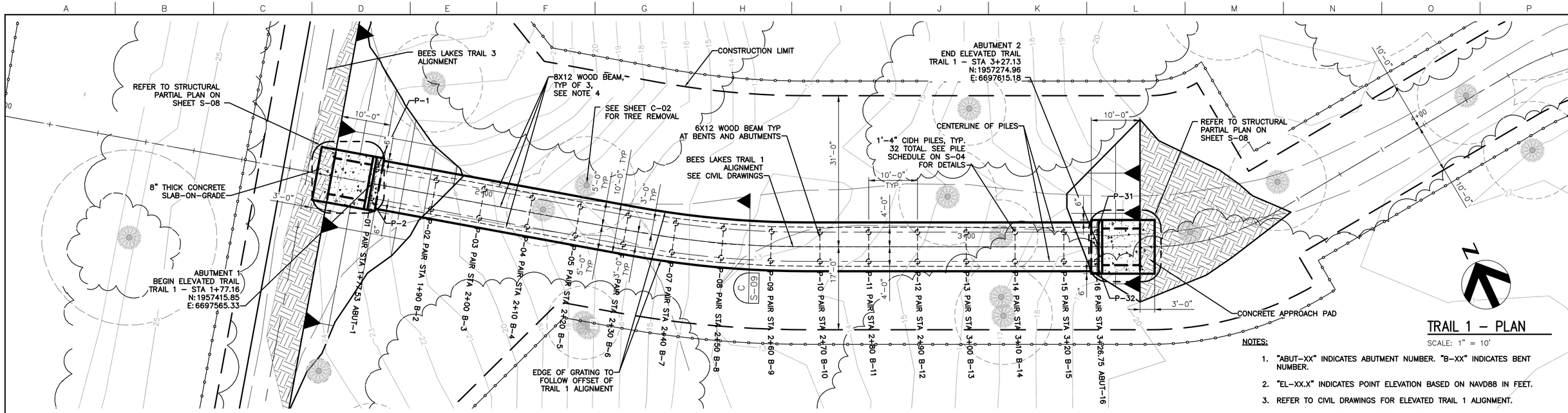

TRAIL 1 – PLAN

SCALE: 1" = 10'

NOTES:

1. "ABUT-XX" INDICATES ABUTMENT NUMBER. "B-XX" INDICATES BENT NUMBER.
2. "EL-XX.X" INDICATES POINT ELEVATION BASED ON NAVD88 IN FEET.
3. REFER TO CIVIL DRAWINGS FOR ELEVATED TRAIL 1 ALIGNMENT.
4. THE 8X12 BEAMS ARE STRAIGHT AND SIMPLY SUPPORTED AT BENTS/ABUTMENTS IN EACH SPAN. SEE DETAILS 2/S-05.

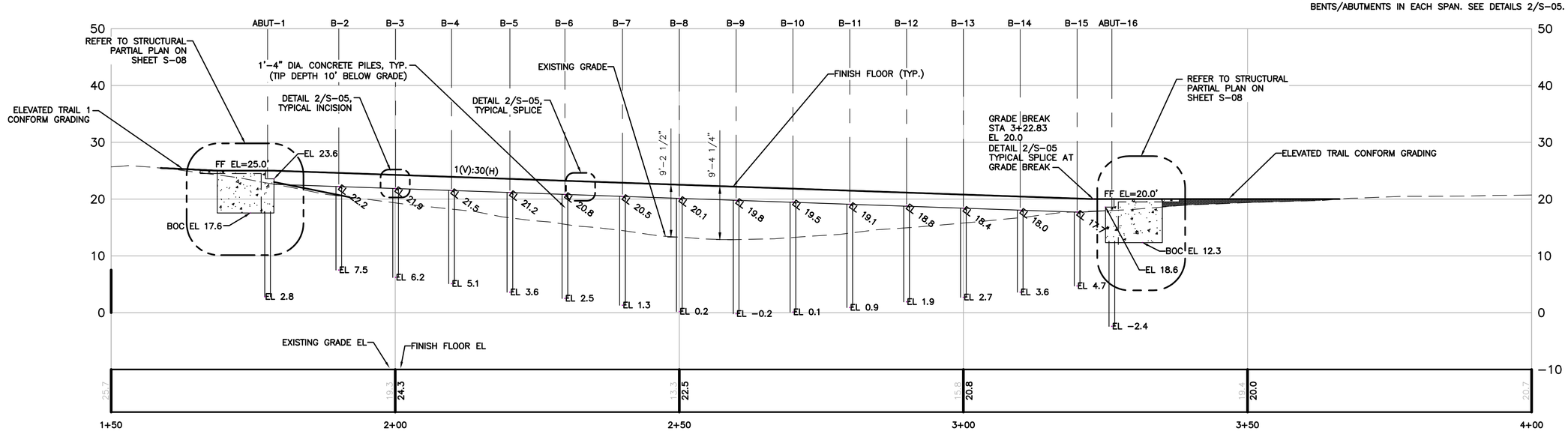

TRAIL 1 – PROFILE

SCALE: 1" = 10'

C:\PWWORKING\WEST01\D2918499\S-06.DWG
December 6, 2023

Issue No.	Description	Date	Drwn.	Chkd.	Resp. Engr.	Proj. Mgr.

HORIZONTAL DATUM IS THE CALIFORNIA COORDINATE SYSTEM, ZONE 2 (NAD 83)

VERTICAL DATUM IS NAVD 88

EL NAVD 88 = EL NGVD 29+2.6'

HDR Engineering, Inc.

BAR LENGTH ON ORIGINAL DRAWING EQUALS ONE INCH. ADJUST SCALE ACCORDINGLY.

Project Manager: K. JAMESON
Designed: Z. LI
Designed: V. RUSSO
Checked: J. MANISCALCO
Drawn: V. RUSSO

SACRAMENTO-SAN JOAQUIN DELTA CONSERVANCY
BEES LAKES HABITAT RESTORATION PROJECT

90% DESIGN

BEES LAKES TRAIL 1

FOUNDATION PLAN AND PROFILE

Date	Project No.	Drawing No.	Issue
NOVEMBER, 2023	3223-10358905	S-06	X
Scale: 1" = 10'	File Name: S-06.DWG		

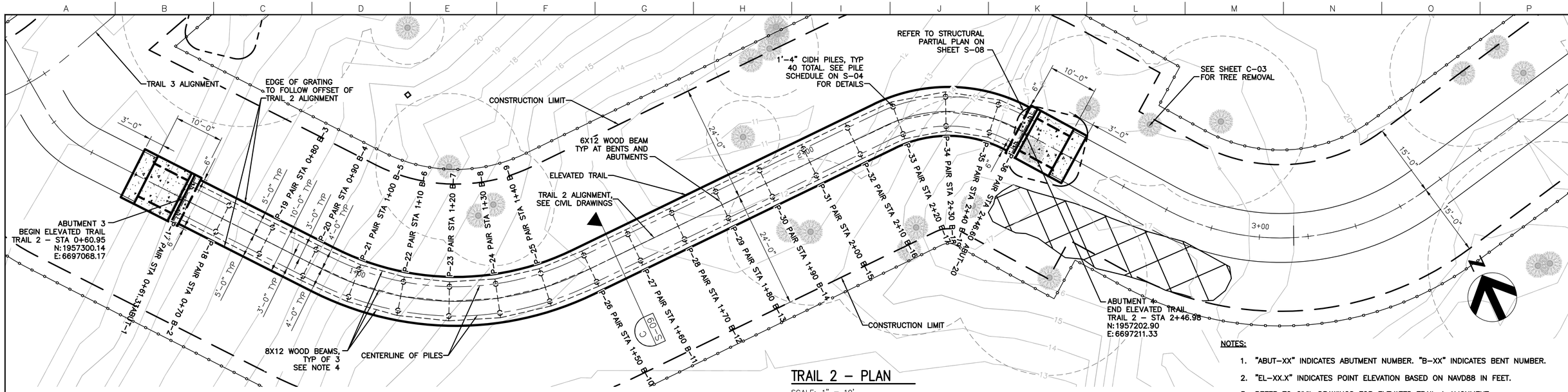

TRAIL 2 – PLAN

SCALE: 1" = 10'

NOTES:

1. "ABUT–XX" INDICATES ABUTMENT NUMBER. "B–XX" INDICATES BENT NUMBER.
2. "EL–XX.X" INDICATES POINT ELEVATION BASED ON NAVD88 IN FEET.
3. REFER TO CIVIL DRAWINGS FOR ELEVATED TRAIL 1 ALIGNMENT.
4. THE 8X12 BEAMS ARE STRAIGHT AND SIMPLY SUPPORTED AT BENTS/ABUTMENTS IN EACH SPAN. SEE DETAILS 2/S–05.

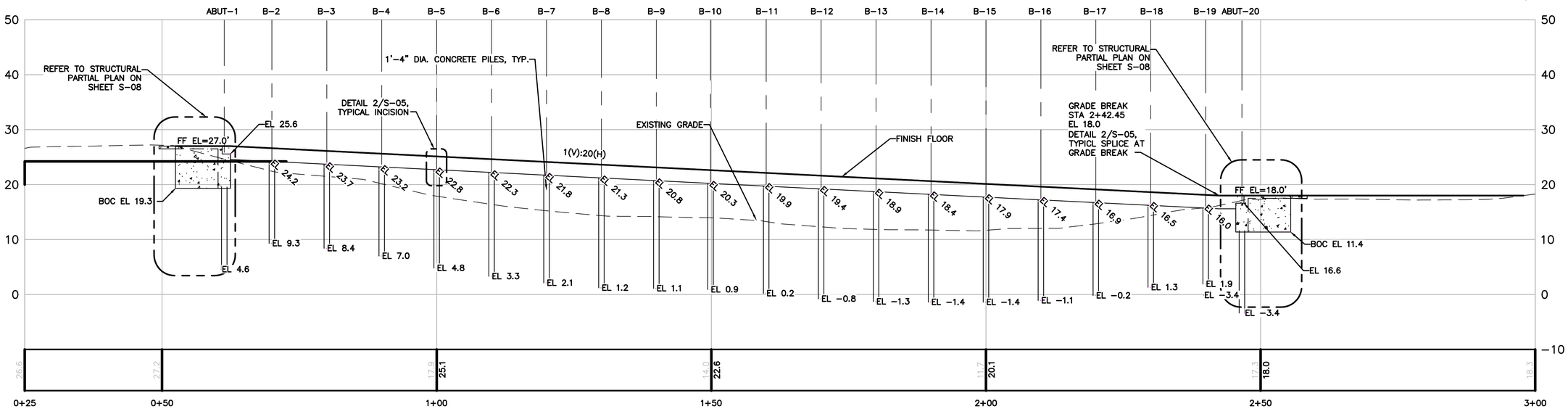

TRAIL 2 – PROFILE

SCALE: 1" = 10'

90% DESIGN

Issue No.	Description	Date	Drwn.	Chkd.	Resp. Engr.	Proj. Mgr.

HORIZONTAL DATUM IS THE CALIFORNIA COORDINATE SYSTEM, ZONE 2 (NAD 83)

VERTICAL DATUM IS NAVD 88

EL NAVD 88 = EL NGVD 29+2.6'

HDR Engineering, Inc.

BAR LENGTH ON ORIGINAL DRAWING EQUALS ONE INCH. ADJUST SCALE ACCORDINGLY.

Project Manager: K. JAMESON
Designed: Z. LI
Designed: V. RUSSO
Checked: J. MANISCALCO
Drawn: V. RUSSO

SACRAMENTO-SAN JOAQUIN DELTA CONSERVANCY
BEES LAKES HABITAT RESTORATION PROJECT

BEES LAKES TRAIL 2

FOUNDATION PLAN AND PROFILE

Date	Project No.	Drawing No.	Issue
NOVEMBER, 2023	3223–10358905	S-07	X
Scale: 1" = 10'	File Name: S–07.DWG		

C:\PWWORKING\WEST01\D2918499\S-07.DWG
December 6, 2023

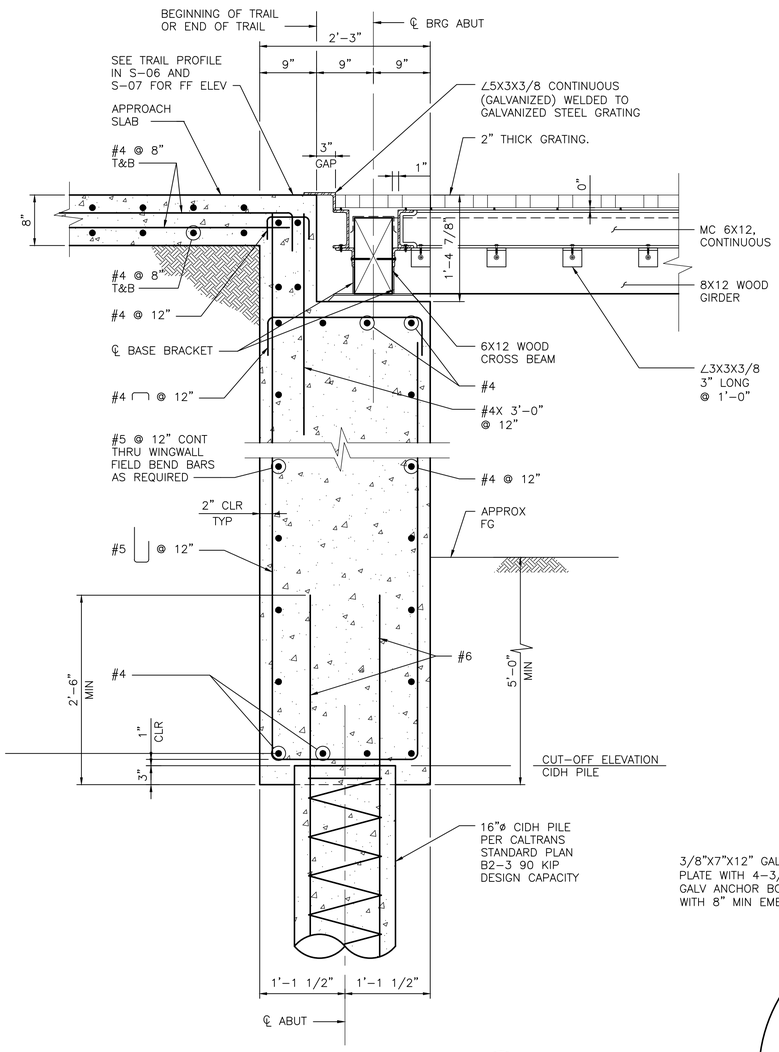

TYPICAL ABUTMENT SECTION

1" = 1'-0"

A

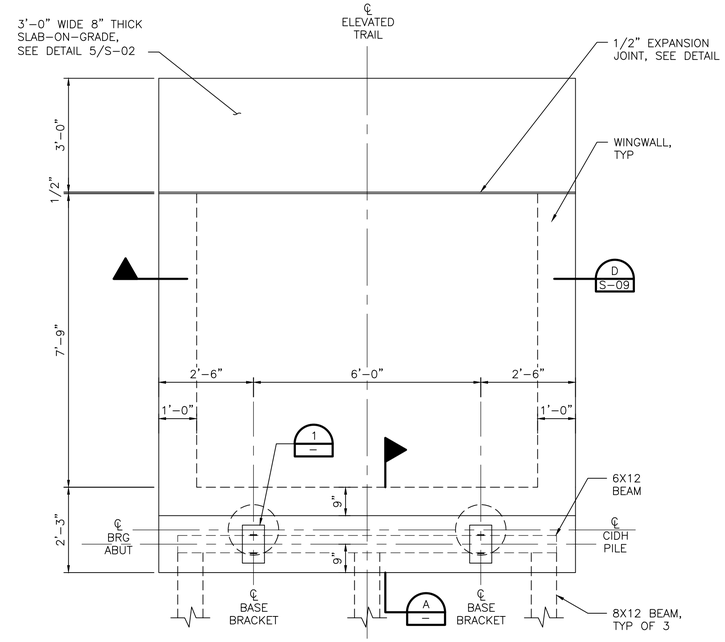

PLAN – TYPICAL ABUTMENT

1/2" = 1'-0"

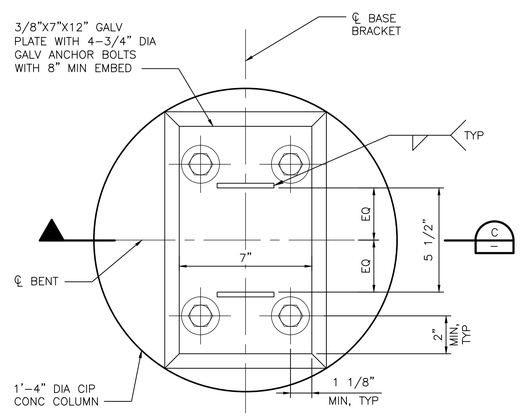

AT BENT

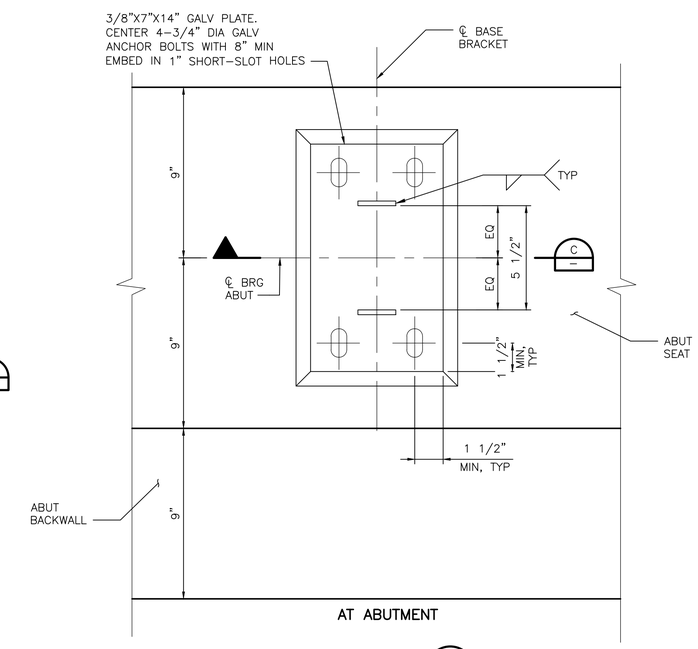

AT ABUTMENT

DETAIL – BASE BRACKET

3" = 1'-0"

1

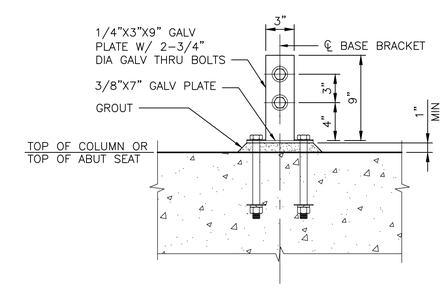

SECTION – THRU BASE BRACKET

1 1/2" = 1'-0"

C

C:\PWWORKING\WEST01\D2918499\S-08.DWG
December 6, 2023

Issue No.	Description	Date	Drwn.	Chkd.	Resp. Engr.	Proj. Mgr.

HORIZONTAL DATUM IS THE CALIFORNIA COORDINATE SYSTEM, ZONE 2 (NAD 83)

VERTICAL DATUM IS NAVD 88

EL NAVD 88 =
EL NGVD 29+2.6'

HDR Engineering, Inc.

BAR LENGTH ON ORIGINAL DRAWING EQUALS ONE INCH. ADJUST SCALE ACCORDINGLY.

Project Manager: K. JAMESON
Designed: Z. LI
Designed: X
Checked: J. MANISCALCO
Drawn: R. PRASAD

SACRAMENTO-SAN JOAQUIN DELTA CONSERVANCY
BEES LAKES HABITAT RESTORATION PROJECT

90% DESIGN

BEES LAKES
PARTIAL PLAN AT
BOARDWALK RETAINING BUTTRESS

Date	Project No.	Drawing No.	Issue
NOVEMBER, 2023	3223-10358905	S-08	X
Scale: AS NOTED	File Name: S-08.DWG		

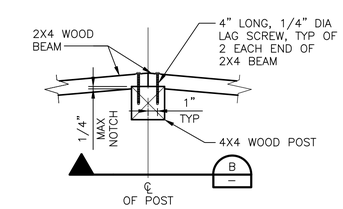

1. AT CURVED ALIGNMENT

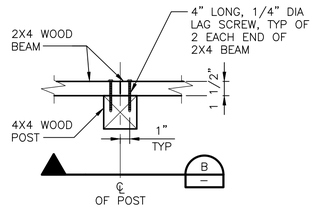

2. AT STRAIGHT ALIGNMENT

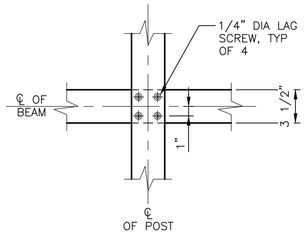

SECTION B

1 1/2" = 1'-0"

SECTION E

1 1/2" = 1'-0"

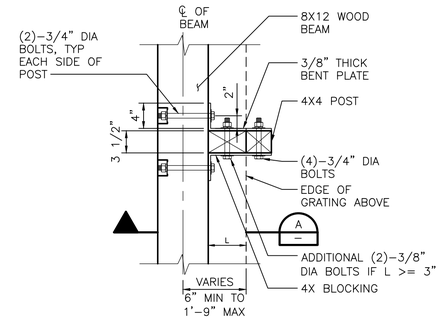

SECTION AT POST

1" = 1'-0"

D

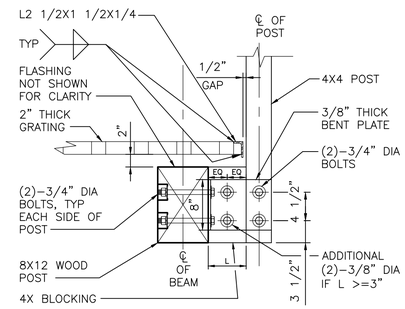

SECTION

1" = 1'-0"

A

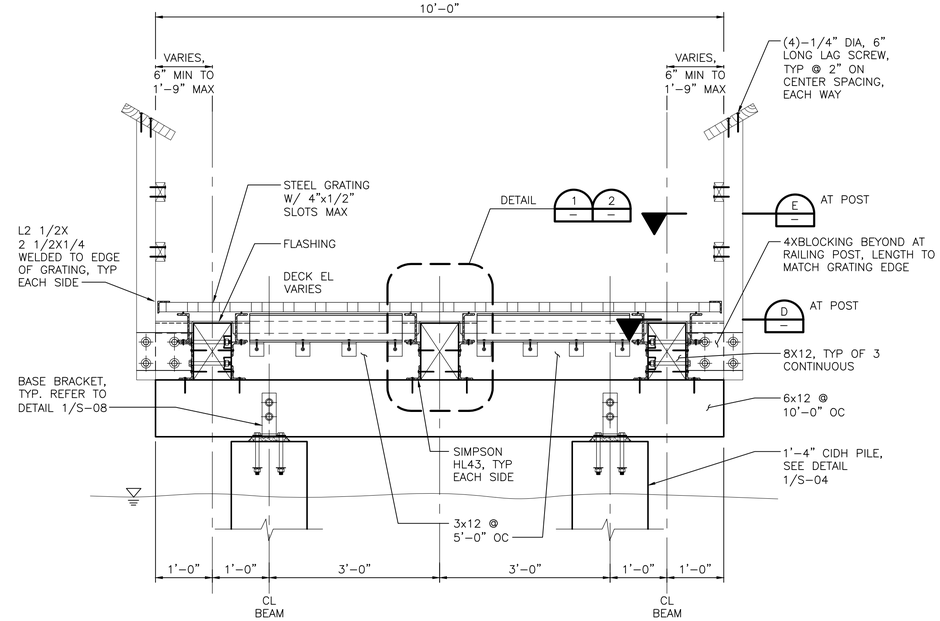

SECTION @ TYPICAL BENT

3/4" = 1'-0"

C S-08

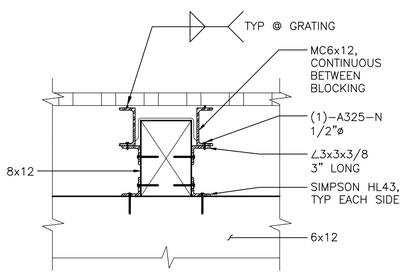

DETAIL BETWEEN BLOCKINGS

1" = 1'-0"

1

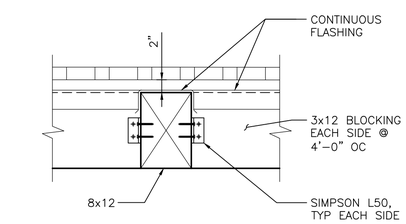

DETAIL @ BLOCKING

1" = 1'-0"

2

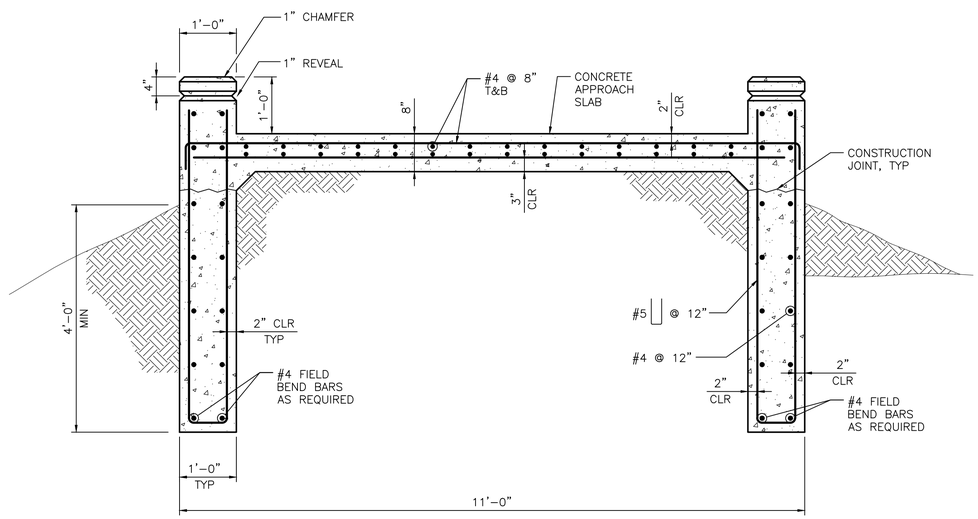

SECTION

3/4" = 1'-0"

B S-08

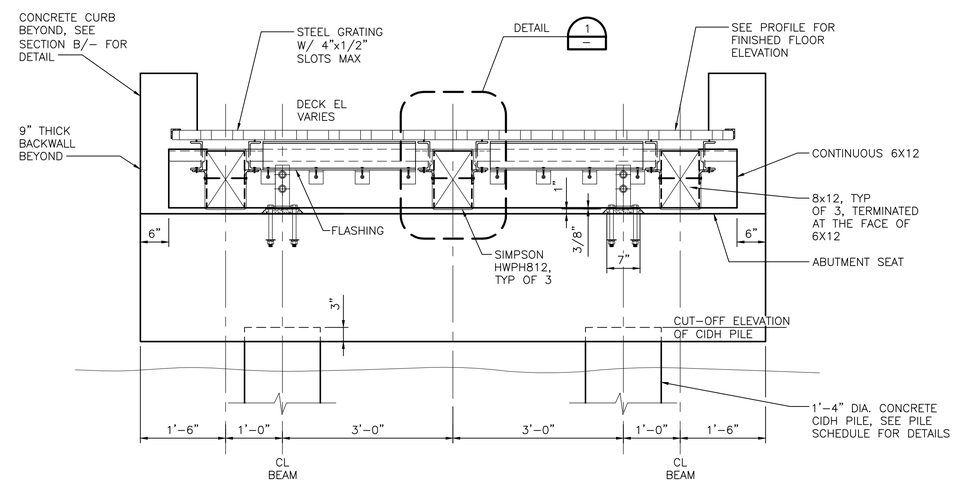

SECTION @ ABUTMENT

3/4" = 1'-0"

A S-08

90% DESIGN

Issue No.	Description	Date	Drwn.	Chkd.	Resp. Engr.	Proj. Mgr.

HORIZONTAL DATUM IS THE CALIFORNIA COORDINATE SYSTEM, ZONE 2 (NAD 83)

VERTICAL DATUM IS NAVD 88

EL NAVD 88 =
EL NGVD 29+2.6'

HDR Engineering, Inc.

BAR LENGTH ON ORIGINAL DRAWING EQUALS ONE INCH. ADJUST SCALE ACCORDINGLY.

Project Manager: K. JAMESON
Designed: Z. LI
Designed: X
Checked: J. MANISCALCO
Drawn: R. PRASAD

SACRAMENTO-SAN JOAQUIN DELTA CONSERVANCY
BEES LAKES HABITAT RESTORATION PROJECT

BEES LAKES
SECTIONS AND DETAILS
BOARDWALK

Date	Project No.	Drawing No.	Issue
NOVEMBER, 2023	3223-10358905	S-09	X
Scale: AS NOTED	File Name: S-09.DWG		

C:\PWWORKING\WEST01\D2918499\S-09.DWG
December 6, 2023

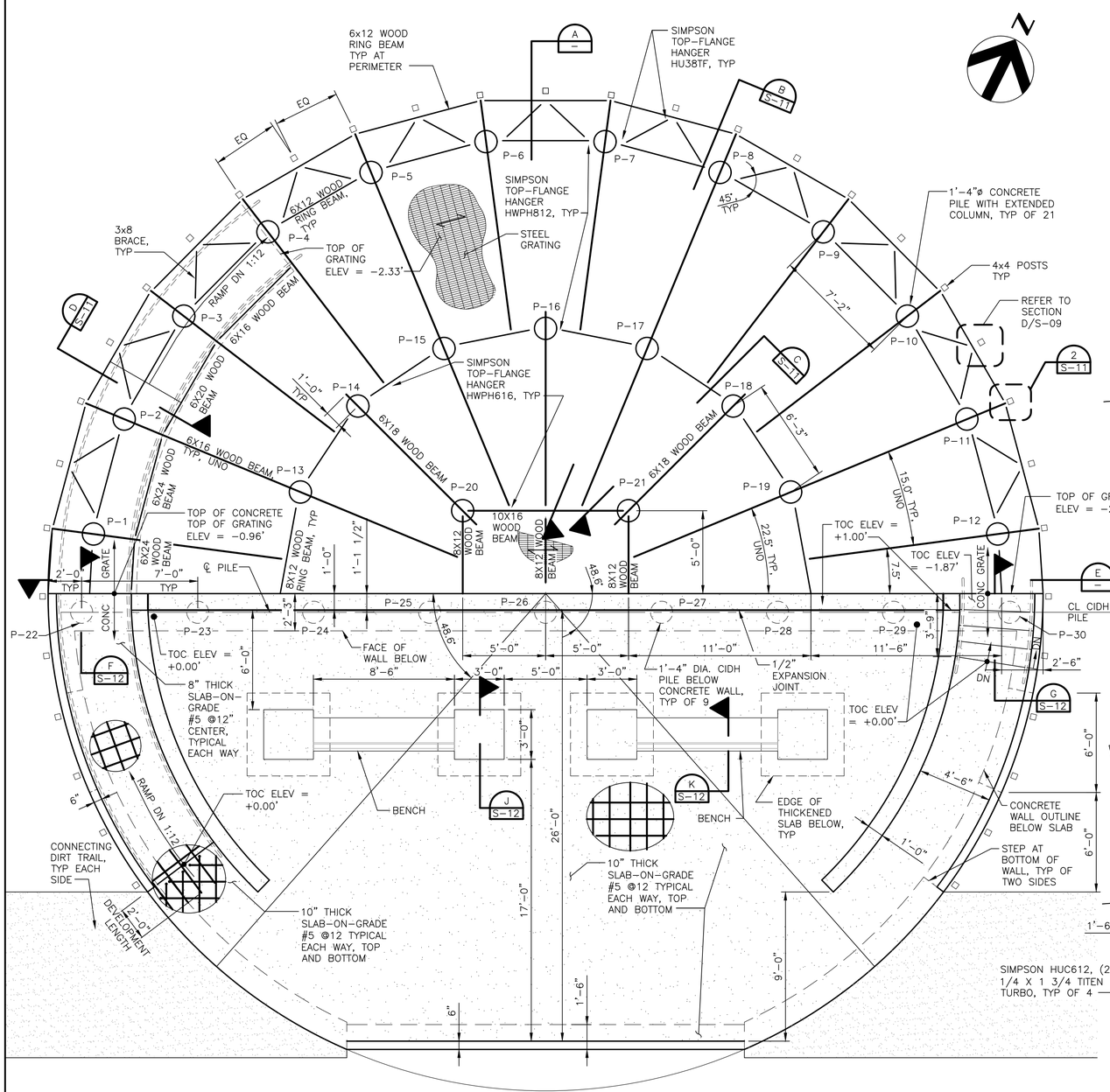

TYPICAL VIEWING PLATFORM PLAN

1/4" = 1'-0"

SECONDARY VIEWING PLATFORM SHOWN, PRIMARY VIEWING PLATFORM SIMILAR

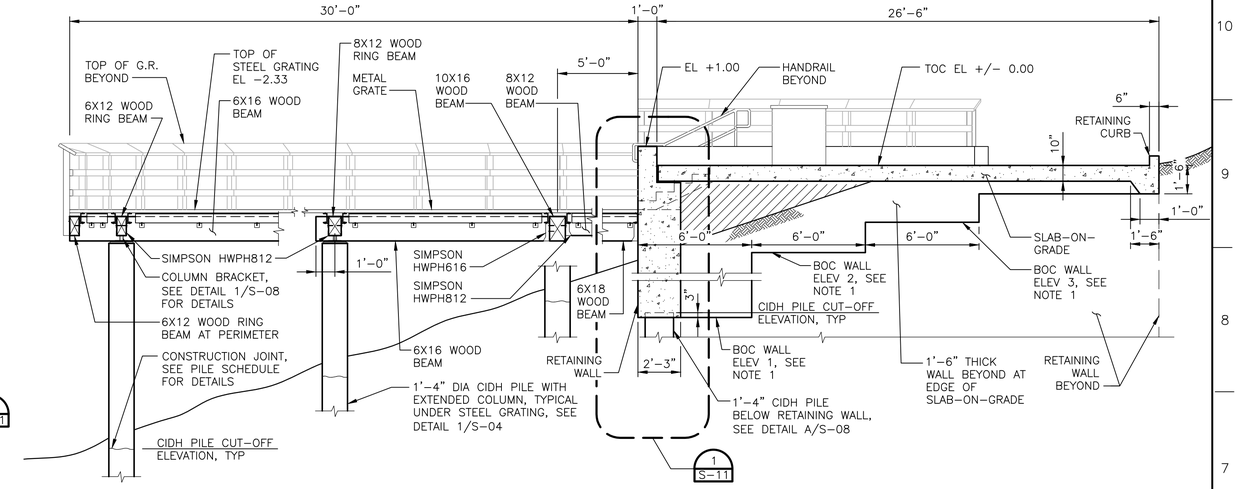

TYPICAL VIEWING PLATFORM SECTION

1/4" = 1'-0"

SECONDARY VIEWING PLATFORM SHOWN, PRIMARY VIEWING PLATFORM SIMILAR

NOTES:

1. ELEVATIONS ARE SHOWN AS "+/- X.XX". THEY ARE RELATIVE TO PLATFORM TOP-OF-CONCRETE ELEVATION, WHICH IS SHOWN AS "+/- 0.00". ABSOLUTE TOP-OF-CONCRETE ELEVATIONS AND BOTTOM-OF-CONCRETE WALL ELEVATION FOR BOTH VIEWING PLATFORMS ARE PROVIDED BELOW:

	TOC ELEV (NAVD88)	BOC WALL ELEV 1 (NAVD88)	BOC WALL ELEV 2 (NAVD88)	BOC WALL ELEV 3 (NAVD88)
PRIMARY VIEWING PLATFORM	20.5'	15.25'	15.25'	17.00'
SECONDARY VIEWING PLATFORM	20.0'	12.50'	14.50'	16.50'

2. "P-XX" DENOTES CONCRETE CIDH PILES. REFER TO S-08 FOR PILE DETAILS.

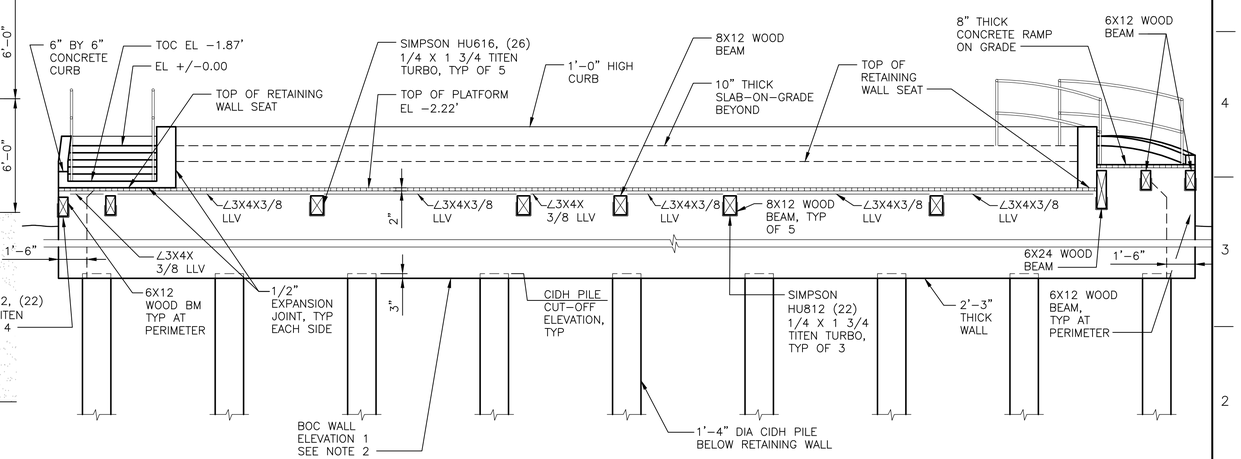

SECTION E

1/4" = 1'-0"

SECONDARY VIEWING PLATFORM SHOWN, PRIMARY VIEWING PLATFORM SIMILAR

90% DESIGN

Issue No.	Description	Date	Drwn.	Chkd.	Resp. Engr.	Proj. Mgr.

HORIZONTAL DATUM IS THE CALIFORNIA COORDINATE SYSTEM, ZONE 2 (NAD 83)

VERTICAL DATUM IS NAVD 88

EL NAVD 88 = EL NGVD 29+2.6'

HDR Engineering, Inc.

BAR LENGTH ON ORIGINAL DRAWING EQUALS ONE INCH. ADJUST SCALE ACCORDINGLY.

Project Manager: K. JAMESON
Designed: Z. LI
Designed: X
Checked: J. MANISCALCO
Drawn: R. PRASAD

SACRAMENTO-SAN JOAQUIN DELTA CONSERVANCY
BEES LAKES HABITAT RESTORATION PROJECT

BEES LAKES
PILE AND FRAMING PLAN AND SECTION - VIEWING PLATFORM

Date	Project No.	Drawing No.	Issue
NOVEMBER, 2023	3223-10358905	S-10	X
Scale: AS NOTED	File Name: S-10.DWG		

C:\PWWORKING\WEST01\D2918499\S-10.DWG
December 6, 2023

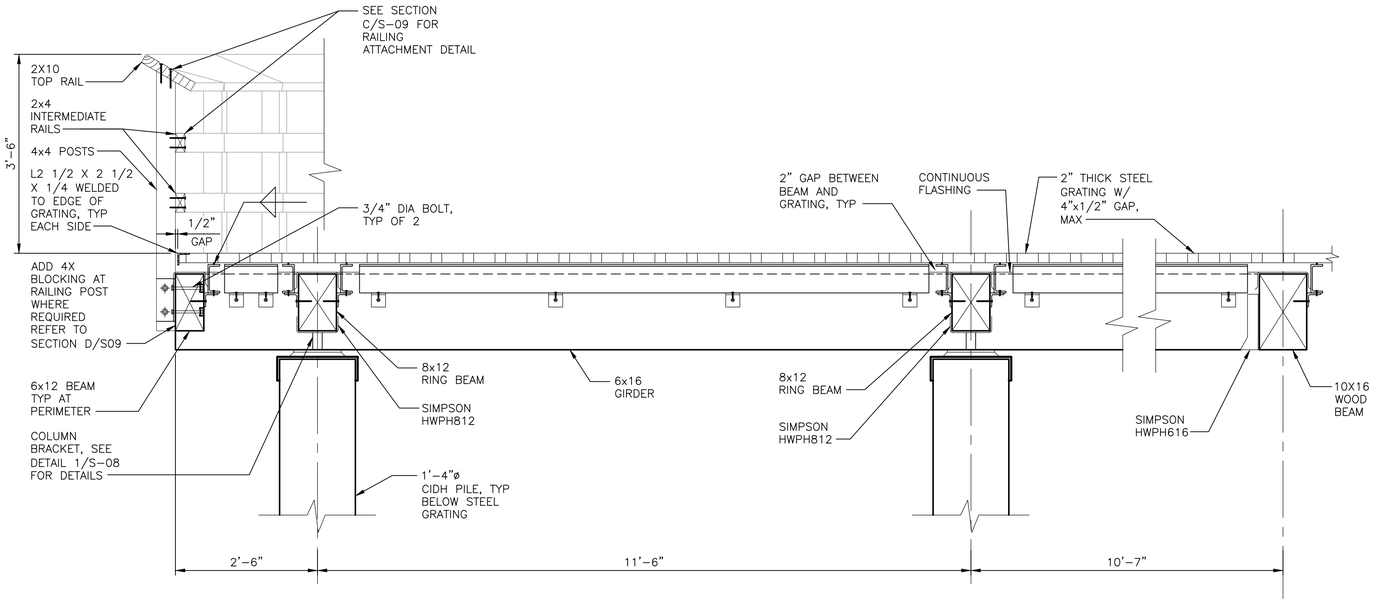

VIEWING PLATFORM SECTION (B / S-10)

3/4" = 1'-0"

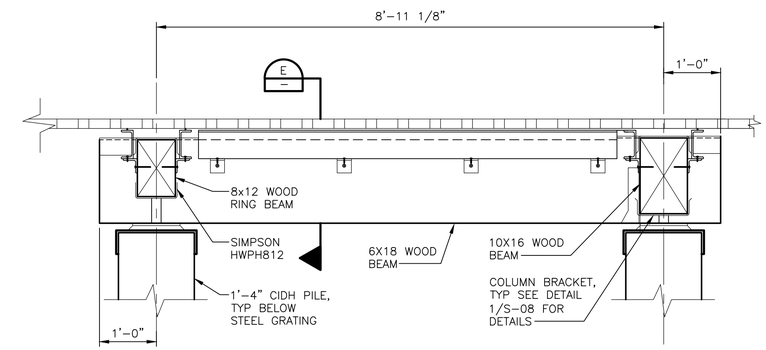

VIEWING PLATFORM SECTION (C / S-10)

3/4" = 1'-0"

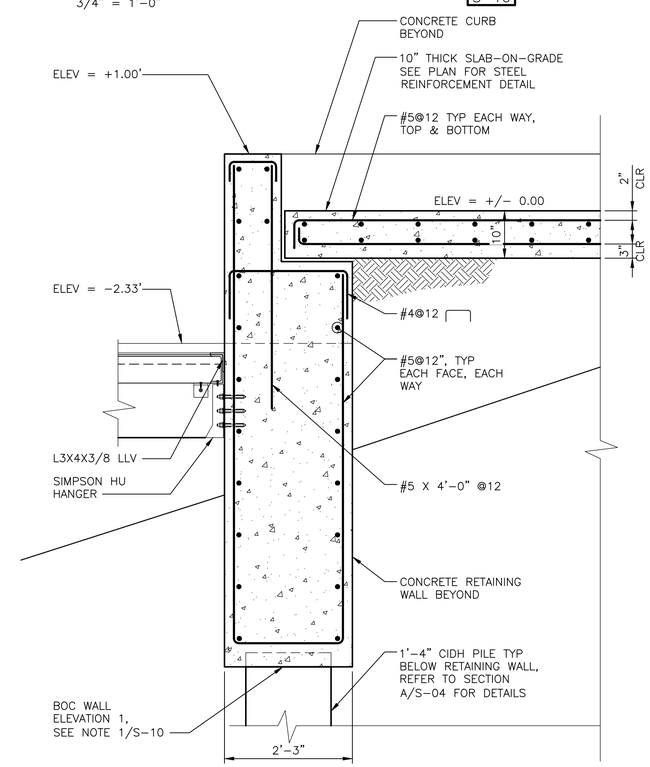

DETAIL (1 / S-10)

3/4" = 1'-0"

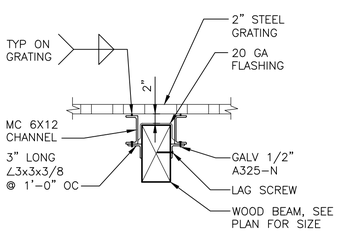

SECTION (E / —)

3/4" = 1'-0"

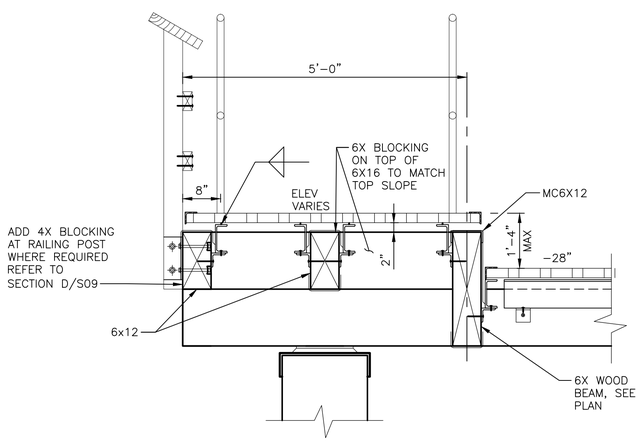

VIEWING PLATFORM SECTION (D / S-10)

3/4" = 1'-0"

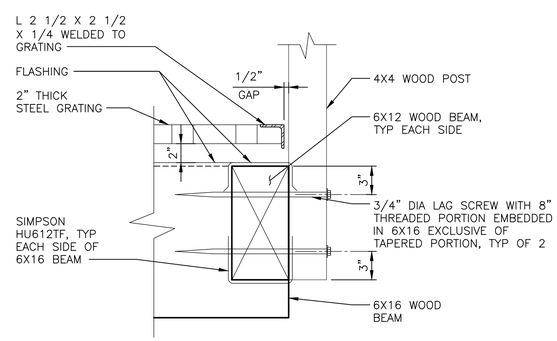

DETAIL (2 / S-11)

1 1/2" = 1'-0"

90% DESIGN

Issue No.	Description	Date	Drwn.	Chkd.	Resp. Engr.	Proj. Mgr.

HORIZONTAL DATUM IS THE CALIFORNIA COORDINATE SYSTEM, ZONE 2 (NAD 83)

VERTICAL DATUM IS NAVD 88

EL NAVD 88 = EL NGVD 29+2.6'

HDR Engineering, Inc.

BAR LENGTH ON ORIGINAL DRAWING EQUALS ONE INCH. ADJUST SCALE ACCORDINGLY.

Project Manager: K. JAMESON
Designed: Z. LI
Designed: X
Checked: J. MANISCALCO
Drawn: R. PRASAD

SACRAMENTO-SAN JOAQUIN DELTA CONSERVANCY
BEES LAKES HABITAT RESTORATION PROJECT

BEES LAKES SECTIONS AND DETAILS VIEWING PLATFORM

Date	Project No.	Drawing No.	Issue
NOVEMBER, 2023	3223-10358905	S-11	X
Scale: AS NOTED	File Name: S-11.DWG		

C:\PWWORKING\WEST01\D2918499\S-11.DWG
December 6, 2023

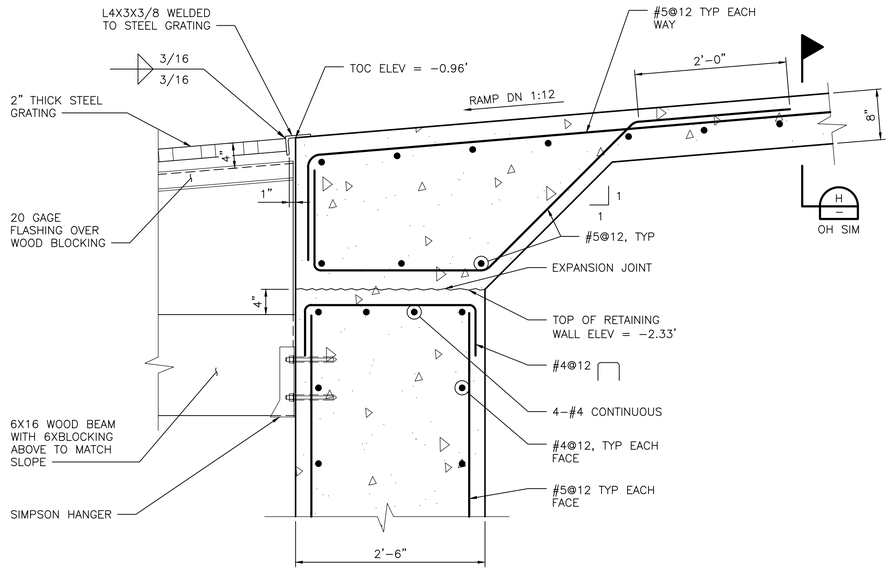

SECTION F
1" = 1'−0"

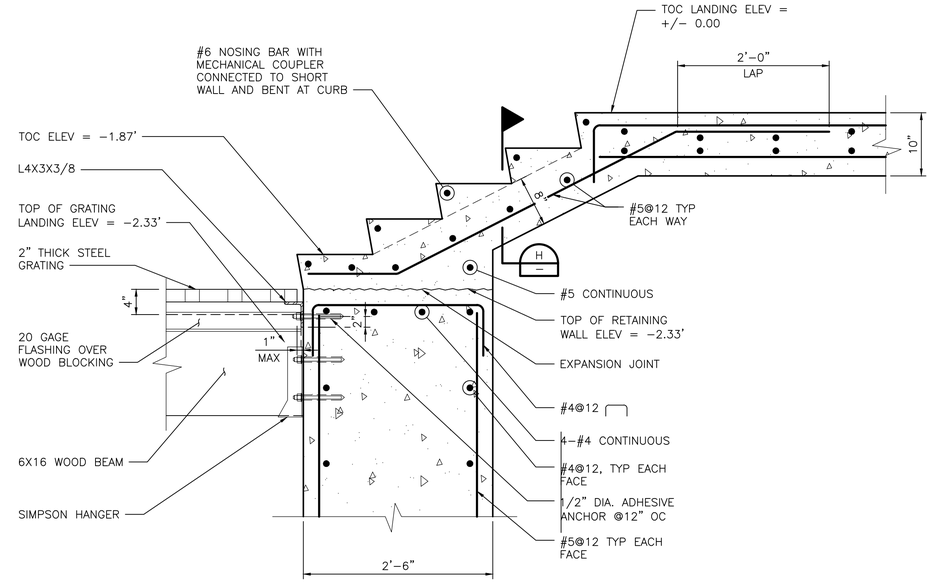

SECTION G
1" = 1'−0"

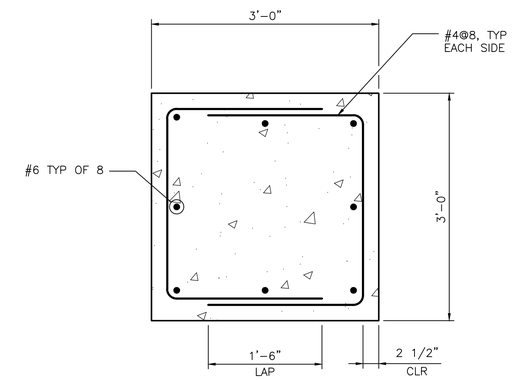

SECTION A
1" = 1'−0"

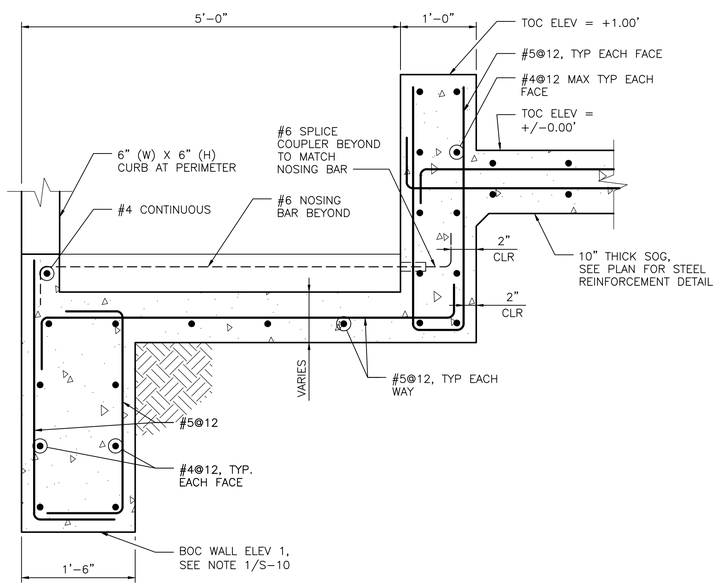

SECTION H
1" = 1'−0"

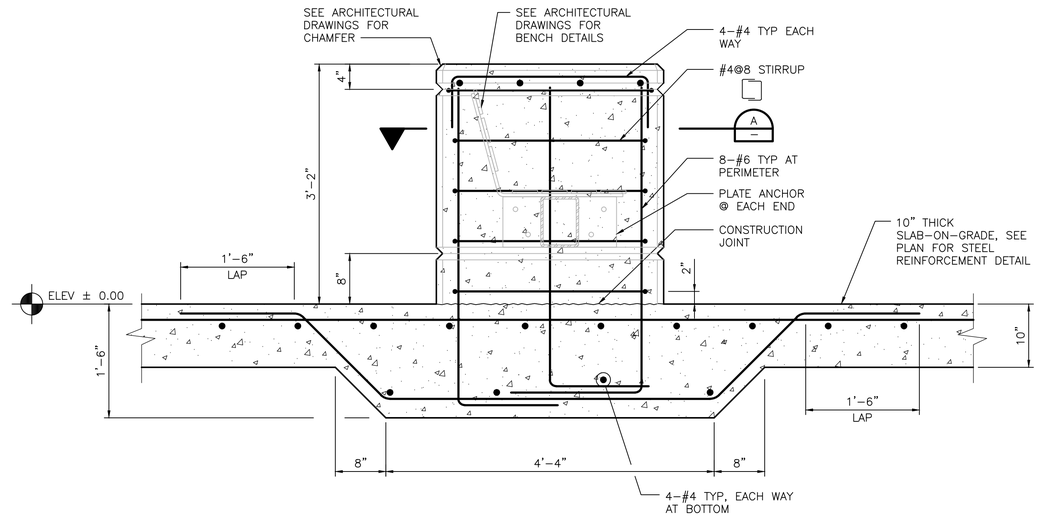

SECTION J
1" = 1'−0"

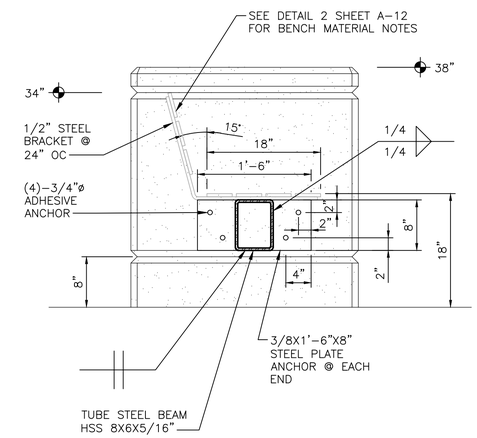

SECTION K
1" = 1'−0"

90% DESIGN

Issue No.	Description	Date	Drwn.	Chkd.	Resp. Engr.	Proj. Mgr.

HORIZONTAL DATUM IS THE CALIFORNIA COORDINATE SYSTEM, ZONE 2 (NAD 83)

VERTICAL DATUM IS NAVD 88

EL NAVD 88 = EL NGVD 29+2.6'

HDR Engineering, Inc.

BAR LENGTH ON ORIGINAL DRAWING EQUALS ONE INCH. ADJUST SCALE ACCORDINGLY.

Project Manager: K. JAMESON
Designed: Z. LI
Designed: X
Checked: J. MANISCALCO
Drawn: R. PRASAD

SACRAMENTO-SAN JOAQUIN DELTA CONSERVANCY
BEES LAKES HABITAT RESTORATION PROJECT

BEES LAKES PARTIAL PLAN AT BOARDWALK RETAINING BUTTRESS

Date	Project No.	Drawing No.	Issue
NOVEMBER, 2023	3223−10358905	S-12	X
Scale: AS NOTED	File Name: S−12.DWG		

C:\PWWORKING\WEST01\D2918499\S-12.DWG
December 6, 2023

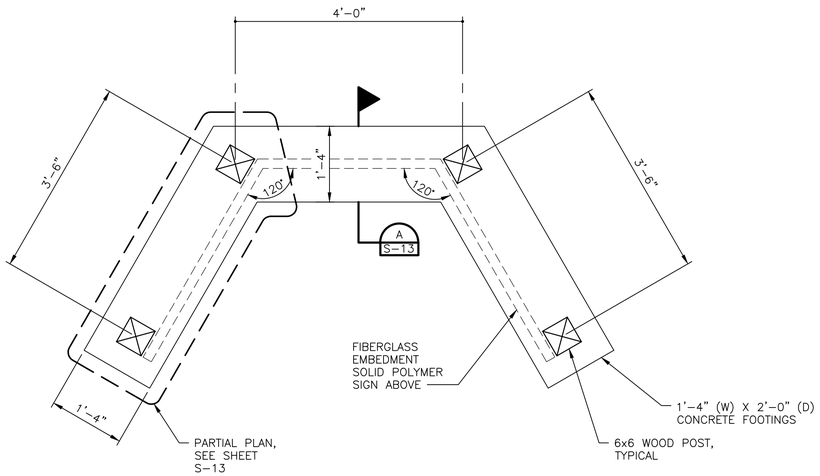

KIOSK FOUNDATION PLAN

3/4" = 1'-0"

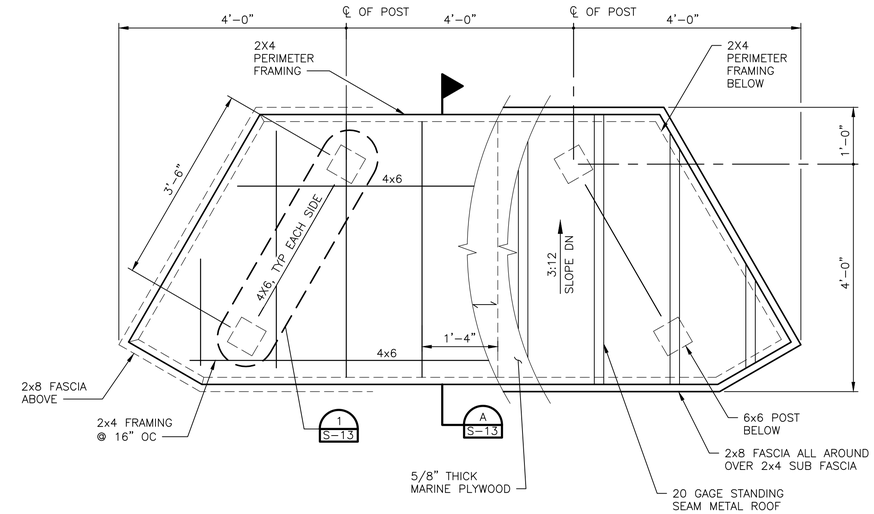

KIOSK ROOF PLAN

3/4" = 1'-0"

Issue No.	Description	Date	Drwn.	Chkd.	Resp. Engr.	Proj. Mgr.

HORIZONTAL DATUM IS THE CALIFORNIA COORDINATE SYSTEM, ZONE 2 (NAD 83)

VERTICAL DATUM IS NAVD 88

EL NAVD 88 =
EL NGVD 29+2.6'

HDR Engineering, Inc.

BAR LENGTH ON ORIGINAL DRAWING EQUALS ONE INCH. ADJUST SCALE ACCORDINGLY.

Project Manager: K. JAMESON
Designed: M. LAMBERT
Designed: Z. LI
Checked: J. MANISCALCO
Drawn: R. PRASAD

SACRAMENTO-SAN JOAQUIN DELTA CONSERVANCY
BEES LAKES HABITAT RESTORATION PROJECT

90% DESIGN

BEES LAKES
KIOSK FOUNDATION AND ROOF PLAN

Date	Project No.	Drawing No.	Issue
NOVEMBER, 2023	3223-10358905	S-13	X
Scale: 3/4" = 1'-0"	File Name: S-13.DWG		

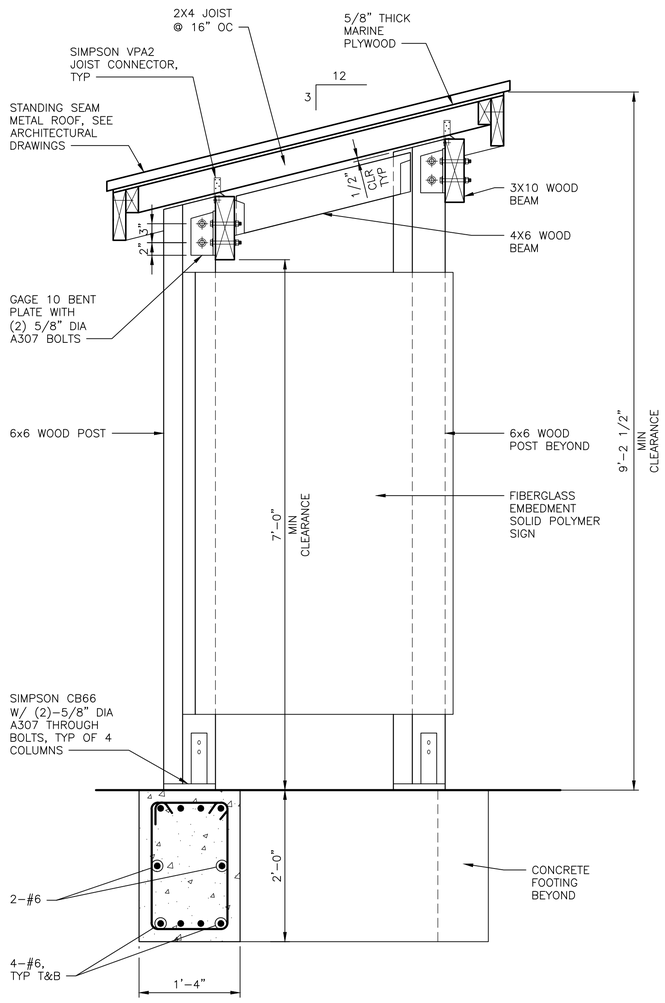

KIOSK SECTION

1" = 1'-0"

A
S-13

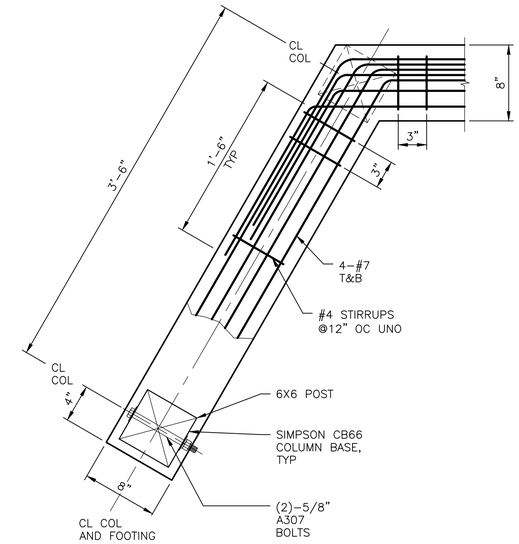

KIOSK PARTIAL ENLARGED PLAN

1 1/2" = 1'-0"

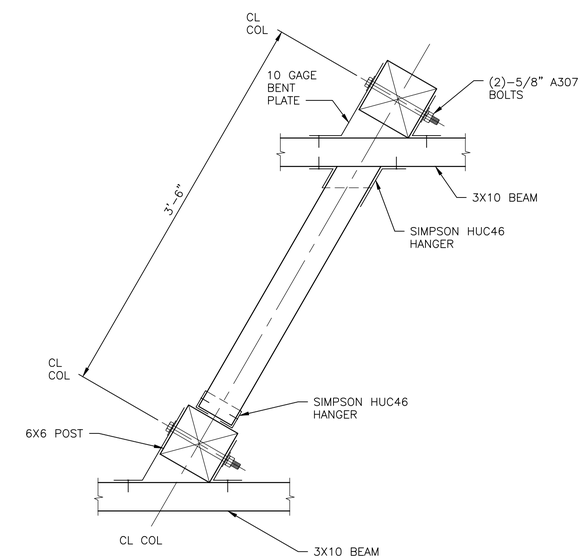

DETAIL

1 1/2" = 1'-0"

1
S-12

90% DESIGN

Issue No.	Description	Date	Drwn.	Chkd.	Resp. Engr.	Proj. Mgr.

HORIZONTAL DATUM IS THE CALIFORNIA COORDINATE SYSTEM, ZONE 2 (NAD 83)

VERTICAL DATUM IS NAVD 88

EL NAVD 88 =
EL NGVD 29+2.6'

HDR Engineering, Inc.

BAR LENGTH ON ORIGINAL DRAWING EQUALS ONE INCH. ADJUST SCALE ACCORDINGLY.

Project Manager: K. JAMESON
Designed: M. LAMBERT
Designed: Z. LI
Checked: J. MANISCALCO
Drawn: R. PRASAD

SACRAMENTO-SAN JOAQUIN DELTA CONSERVANCY
BEES LAKES HABITAT RESTORATION PROJECT

BEES LAKES
KIOSK SECTIONS AND DETAILS

Date	Project No.	Drawing No.	Issue
NOVEMBER, 2023	3223-10358905	S-14	X
Scale: AS NOTED	File Name: S-14.DWG		

GENERAL NOTES

1. ALL WORK SHALL BE PERFORMED BY A LICENSED CONTRACTOR AND EXPERIENCED WORKERS. THE CONTRACTOR SHALL CONFORM TO ALL FEDERAL, STATE, AND LOCAL CODES. SEE GENERAL SPECIFICATIONS FOR ADDITIONAL INFORMATION.
2. THE CONTRACTOR SHALL ASSUME SOLE RESPONSIBILITY FOR PROJECT SITE CONDITIONS DURING THE COURSE OF THE PROJECT INCLUDING SAFETY OF ALL PERSONS AT ALL TIMES. THE CONTRACTOR SHALL BE RESPONSIBLE FOR PROTECTING CONSTRUCTION EQUIPMENT AND MATERIALS FROM THEFT AND VANDALISM DURING THE CONTRACT PERIOD.
3. THE CONTRACTOR SHALL BE RESPONSIBLE FOR VISITING THE PROJECT SITE TO VERIFY SITE CONDITIONS AND COMPLETELY UNDERSTAND THE REQUIRED SCOPE OF WORK SHOWN ON THESE DRAWINGS AND CONTAINED IN THE PROJECT SPECIFICATIONS.
4. ALL AREAS OF PLANTING AND IRRIGATION ARE SUBJECT TO IN-FIELD DESIGN VERIFICATION AND ADJUSTMENTS AS DIRECTED BY THE CITY.
5. THE CONTRACTOR SHALL VERIFY THE LOCATION OF ALL EXISTING UNDERGROUND UTILITIES BEFORE THE START OF ANY CONSTRUCTION OPERATIONS, INCLUDING AND NOT LIMITED TO EXCAVATION OR TRENCHING. THE CONTRACTOR SHALL CALL UNDERGROUND SERVICE ALERT (U.S.A.) AT 811/1-800-227-2600. THE CONTRACTOR SHALL PROVIDE A MINIMUM OF 48 HOURS ADVANCE NOTICE FOR LOCATING UTILITIES.
6. THE CONTRACTOR SHALL CONTACT THE CITY IMMEDIATELY UPON FINDING ANY FIELD CONDITIONS THAT WOULD CONFLICT WITH THE INFORMATION INDICATED ON THESE DRAWINGS OR THE PROJECT SPECIFICATIONS. ALL FIELD ADJUSTMENTS MUST BE APPROVED BY THE CITY BEFORE CONSTRUCTION OF SAID ADJUSTMENTS. FAILURE TO DO SO SHALL RESULT IN THE CONTRACTOR ASSUMING FULL RESPONSIBILITY FOR ANY REQUIRED REVISIONS OR FIELD MODIFICATIONS, AS DIRECTED BY THE CITY, AT NO ADDITIONAL COST.
7. ALL STORAGE OF EQUIPMENT AND MATERIALS SHALL OCCUR WITHIN THE STAGING AREA AS PRESCRIBED ON THESE DRAWINGS AND IN THE SPECIFICATIONS. ALL LUBRICATION, REFUELING OR MAINTENANCE OF CONSTRUCTION VEHICLES SHALL BE CONDUCTED WITHIN APPROVED CONSTRUCTION STAGING AREAS.
8. TEMPORARY FENCING SHALL BE INSTALLED AND MAINTAINED BY THE CONTRACTOR AROUND THE PERIMETER OF THE PROJECT WORK AREAS AND PLANTING AREAS AND AT OTHER LOCATIONS DEEMED NECESSARY BY THE CONTRACTOR. NO WORK OUTSIDE OF THE DESIGNATED LIMIT OF WORK AREA WILL BE PERMITTED WITHOUT THE APPROVAL OF THE CITY. SEE SPECIFICATIONS FOR ADDITIONAL INFORMATION.
9. CONFORM TO EXISTING GRADES AND CONDITIONS WHENEVER POSSIBLE. ANY ADJACENT OR OFF-SITE AREAS DISTURBED BY THE CONTRACTOR'S OPERATION MUST BE RESTORED BY THE CONTRACTOR TO THE PREDISTURBANCE CONDITION TO THE SATISFACTION OF THE CITY.
10. IF ARTIFACTS, FOREIGN OBJECTS, BONE, OR UNKNOWN MATERIALS ARE ENCOUNTERED WHILE DIGGING OR EXCAVATING ON SITE, THE CONTRACTOR SHALL SUSPEND WORK WITHIN 100 FEET OF THE LOCATION UNTIL A QUALIFIED ARCHAEOLOGIST IS ABLE TO ASSESS THE SITE AND FINDINGS TO DETERMINE SIGNIFICANCE. SEE SPECIFICATIONS FOR ADDITIONAL INFORMATION.
11. THE CONTRACTOR IS RESPONSIBLE FOR SOIL EROSION CONTROL MEASURES THAT ARE REQUIRED THROUGH THE DURATION OF THE CONTRACT PERIOD. SHOULD SOIL EROSION CONDITIONS EXIST WHEN THE CONTRACTOR INITIALLY ACCEPTS THE SITE, THE CITY SHALL BE CONTACTED. FAILURE OF THE CONTRACTOR TO NOTIFY THE CITY IMPLIES ACCEPTANCE OF THE SITE BY THE CONTRACTOR IN ITS EXISTING CONDITION. ALL COSTS NECESSARY TO MITIGATE EXISTING EROSION CONTROL PROBLEMS SHALL BE AT THE CONTRACTOR'S EXPENSE AND AT NO ADDITIONAL COST TO THE CITY OR INCREASE IN ORIGINAL BID PRICE SHALL BE PERMITTED.
12. THE PROJECT SITE IS SUBJECT TO INUNDATION. THE CONTRACTOR IS HEREBY NOTICED TO KEEP APPRISED OF LOCAL WEATHER AND RIVER FLOW CONDITIONS TO ENSURE PEOPLE, EQUIPMENT, AND SUPPLIES ARE MOVED TO HIGHER GROUND IN CASE OF A FLOOD EVENT.
13. THE CONTRACTOR SHALL BE RESPONSIBLE FOR KEEPING THE PROJECT SITE IN A NEAT AND ORDERLY CONDITION, FREE OF RUBBISH AND DEBRIS, AT ALL TIMES; REFER TO THE PROJECT SPECIFICATIONS FOR ADDITIONAL SITE CLEANUP REQUIREMENTS.
14. AT ANY TIME, THE CONTRACTOR'S OPERATIONS AND CONSTRUCTION SHALL BE SUBJECT TO OBSERVATION BY THE CITY; REFER TO THE PROJECT SPECIFICATIONS FOR ADDITIONAL INFORMATION.
15. ALL WRITTEN DIMENSIONS SUPERCEDE SCALED DIMENSIONS.
16. REFER TO THE PROJECT SPECIFICATIONS AND THE DETAILS ON THE DRAWINGS FOR ADDITIONAL INFORMATION.
17. DRAWINGS AND SPECIFICATIONS ARE PART OF THE FULL CONSTRUCTION DOCUMENTATION. CONTRACTOR IS RESPONSIBLE TO UNDERSTAND THE REQUIREMENTS OF EACH IN CONSTRUCTION OF THE PROJECT.

CONSTRUCTION ACCESS

1. ALL HAUL AND ACCESS ROUTES SHALL BE EXISTING ROADS AS DIRECTED FOR SUCH USE BY THE CITY. MOVEMENT OF HEAVY EQUIPMENT TO AND FROM THE PROJECT SITE SHALL BE RESTRICTED TO ESTABLISHED O&M CORRIDORS AND ROADWAYS. THE CONTRACTOR'S CONSTRUCTION ACCESS POINTS SHALL BE LIMITED TO THOSE SHOWN ON THE DRAWINGS OR DEFINED IN THE SPECIFICATIONS, OR AS DIRECTED IN THE FIELD BY THE CITY. ALTERNATIVE ACCESS ROUTES OR STAGING AREAS PROPOSED BY THE CONTRACTOR SHALL BE SUBJECT TO REVIEW AND APPROVAL BY THE CITY. PAVED AREAS AT THESE CONTROLLED ACCESS POINTS SHALL BE SWEPT, AS NECESSARY, BY THE CONTRACTOR TO CONTROL DUST AND CLEANUP MATERIAL TRACKED OR SPILLED ON SAID PAVED AREAS. THE CONTRACTOR SHALL CONFORM TO ALL GOVERNING CODES, LAWS AND ORDINANCES.
2. EXCEPT AS SPECIFIED HEREIN, OR AS SHOWN ON THE DRAWINGS, EXISTING STRUCTURES OR OTHER IMPROVEMENTS IN THE AREA ADJACENT TO THE WORK AREA SHALL NOT BE DISTURBED, DAMAGED, OR UNDERMINED BY THE CONTRACTOR, EXCEPT WHERE IN THE OPINION OF THE CITY IT IS ESSENTIAL TO RELOCATE SUCH IMPROVEMENTS. IF RELOCATION OF ANY FACILITY IS REQUIRED, THE CONTRACTOR SHALL RELOCATE THE IMPROVEMENTS SO AS TO BE AT LEAST EQUAL IN CONDITION AND UTILITY TO THE ORIGINAL. THE CONTRACTOR SHALL TAKE ALL NECESSARY PRECAUTIONS TO PREVENT ANY DAMAGE TO EXISTING FACILITIES. SHOULD DAMAGE OR INJURY OCCUR AS A RESULT OF THE CONTRACTOR'S OPERATIONS, THE CONTRACTOR SHALL REPAIR OR REPLACE SUCH DAMAGED FACILITIES TO THE CITY'S SATISFACTION AT THE CONTRACTOR'S EXPENSE.
3. THE CONTRACTOR SHALL REPAIR ANY DAMAGE CAUSED TO EXISTING INFRASTRUCTURE, IRRIGATION OR PUMPING FACILITIES, STORM DRAIN PIPES, PAVEMENT, PUBLIC STREETS, O&M CORRIDORS, LEVEE PATROL ROADS, AB ROADS, OR OTHER UTILITIES AND IMPROVEMENTS RESULTING FROM THE CONTRACTOR'S OPERATIONS.
4. THE CONTRACTOR SHALL LIMIT ACCESS TO SENSITIVE RESOURCE AREAS TO FOOT TRAFFIC ONLY. VEHICLES AND OTHER MOTORIZED EQUIPMENT SHALL NOT ENTER SENSITIVE RESOURCE AREAS.
5. SEE THE GENERAL NOTES AND PROJECT SPECIFICATIONS FOR ADDITIONAL INFORMATION.

IRRIGATION NOTES

1. THE CONTRACTOR SHALL BE RESPONSIBLE FOR THE INSTALLATION OF COMPLETE AND FULLY OPERATIONAL IRRIGATION SYSTEMS TO SUPPORT MEETING THE PERFORMANCE STANDARDS FOR PLANT PERFORMANCE AS PRESCRIBED IN THE PROJECT SPECIFICATIONS.
2. NO ON-SITE WATER AVAILABLE FOR IRRIGATION; SYSTEM WILL BE SUPPLIED BY A MOBILE WATER SOURCE OR BY TEMPORARY WATER STORAGE TANK(S) PLACED WITHIN THE WOODLAND RESTORATION AREA(S) AT THE CONTRACTOR DISCRETION. TO BE DETERMINED BY THE CONTRACTOR, WITH IRRIGATION WATER SUPPLY COSTS INCORPORATED INTO PROJECT BID.
3. THE CONTRACTOR SHALL BE RESPONSIBLE FOR FAMILIARITY WITH EXISTING AND PROPOSED GRADE CONDITIONS, FENCE LOCATIONS, AND EXISTING VEGETATION TO BE PRESERVED. THE CONTRACTOR SHALL BE RESPONSIBLE FOR VERIFICATION OF SITE CONDITIONS AND PROJECT REQUIREMENTS BEFORE LAYOUT OF IRRIGATION SYSTEM.
4. THE CONTRACTOR SHALL COORDINATE THEIR OPERATIONS WITH THE CITY FOR THE PLACEMENT OF PIPING AND OTHER IRRIGATION EQUIPMENT. ADDITIONALLY, THE CONTRACTOR SHALL COORDINATE THEIR WORK WITH ALL OTHER TRADES AND OTHER CONTRACTORS ON OR ADJACENT TO THE PROJECT SITE.
5. CONTRACTOR SHALL COORDINATE WITH THE CITY FOR WATER SUPPLY SPECIFICATIONS AND APPROVAL FOR INSTALLATION.
6. THE CONTRACTOR SHALL BE RESPONSIBLE FOR COORDINATING THE PLACEMENT OF IRRIGATION EQUIPMENT AND MATERIALS WITH INDIVIDUAL PLANT LOCATIONS AND EXISTING SITE CONDITIONS.
7. CONTRACTOR SHALL BE RESPONSIBLE FOR THE PROTECTION OF IRRIGATION SYSTEM FROM THEFT AND VANDALISM, DAMAGE BY WILDLIFE, AND PROMPT REPLACEMENT OF DAMAGED OR MISSING PARTS AND EQUIPMENT.
8. IRRIGATION SYSTEM LAYOUT SHOWN FOR THE PROJECT ARE FOR INFORMATIONAL USE ONLY AS A GRAPHICAL REPRESENTATION. THE CONTRACTOR SHALL VERIFY FIELD CONDITIONS TO MEET DESIGN INTENT.
9. THE CONTRACTOR SHALL PROVIDE AN IRRIGATION LAYOUT DESIGN FOR CITY APPROVAL PRIOR TO INSTALLATION.
10. SEE THE GENERAL NOTES AND PROJECT SPECIFICATIONS FOR ADDITIONAL INFORMATION.
11. IRRIGATION SYSTEM AND WATER SOURCE(S) SHALL BE OPERATIONAL AND APPROVED BY THE CITY PRIOR TO PLANTING INSTALLATION.

PLANTING NOTES

1. PLANT QUANTITIES SHOWN IN THE PLANT LEGEND ARE AN ESTIMATE. THE CONTRACTOR SHALL VERIFY FIELD CONDITIONS AND PROVIDE THE ACTUAL PLANT QUANTITIES NEEDED TO IMPLEMENT THE PLANTING SCHEME AS SHOWN IN THESE DRAWING AND THE PROJECT SPECIFICATIONS.
2. PLANTING AND SEEDING AREAS SHALL BE LOCATED BY THE CONTRACTOR ACCORDING TO THE LAYOUT SHOWN ON THE DRAWINGS. PLANTS SHALL BE DISTRIBUTED WITHIN EACH PLANTING ZONE TO MIMIC NATURAL CONDITIONS SUPPORTED BY THE SITE. INDIVIDUAL PLANT LOCATIONS SHALL BE FLAGGED AND IDENTIFIED BY SPECIES FOR VERIFICATION AND APPROVAL BY THE CITY PRIOR TO PLANT INSTALLATION.
3. THE CONTRACTOR SHALL BE RESPONSIBLE FOR PROVIDING POSITIVE DRAINAGE IN ALL PLANTING AREAS AND AT INDIVIDUAL PLANT LOCATIONS. THE CONTRACTOR SHALL RECEIVE APPROVAL FOR ALL METHODS TO BE USED TO CORRECT DRAINAGE PROBLEMS BEFORE IMPLEMENTATION. THE CONTRACTOR SHALL BE RESPONSIBLE FOR PROVIDING A 2% MINIMUM CROSS-SLOPE AROUND EACH PLANT TO ENSURE POSITIVE DRAINAGE.
4. THE CONTRACTOR SHALL BE RESPONSIBLE FOR MAINTAINING THE PLANTS IN A HEALTHY CONDITION THROUGHOUT THE CONSTRUCTION PERIOD AND MAINTENANCE PERIOD ACCORDING TO THE PROJECT SPECIFICATIONS.
5. PLANTING MATERIALS SHALL BE AS DESIGNATED ON THE PLANT LEGEND.
6. SEE THE GENERAL NOTES AND PROJECT SPECIFICATIONS FOR ADDITIONAL INFORMATION.

MAINTENANCE NOTES

1. THE CONTRACTOR SHALL FURNISH ALL LABOR, MATERIALS, EQUIPMENT, AND INCIDENTALS DURING THE MAINTENANCE PERIOD. REPAIRS DUE TO NATURAL DISASTERS, SUCH AS SEVERE FLOODING, SHALL NOT BE A MAINTENANCE RESPONSIBILITY OF THE CONTRACTOR. ALL MAINTENANCE ACTIVITIES SHALL BE COORDINATED WITH THE CITY. THE MAINTENANCE OPERATIONS SHALL INCLUDE, BUT NOT BE LIMITED TO:
   - MAINTAINING PLANTING SITES AND IRRIGATION SYSTEMS, AND CONDUCTING WEED CONTROL, WATERING, AND DEBRIS REMOVAL FOR THE DURATION OF THE CONTRACT PERIOD;
   - REPLACING ALL DEAD OR SEVERELY STRESSED PLANTS AND OTHER MATERIALS, AS REQUIRED;
   - MAINTAINING ALL WATERING BASINS TO BE WEED FREE AND REMOVING ALL NOXIOUS WEEDS AND OTHER UNWANTED, NON-NATIVE PLANTS FROM PROJECT SITE, AS DIRECTED BY THE CITY;
   - OPERATING THE IRRIGATION SYSTEM ON A REGULAR BASIS THROUGHOUT THE IRRIGATION SEASON AND MAINTAINING THE IRRIGATION SYSTEM IN A FULLY OPERATIONAL CONDITION FOR THE DURATION OF THE MAINTENANCE PERIOD, AND UP TO THE FINAL ACCEPTANCE OF THE PROJECT; AND
   - KEEPING UP-TO-DATE "AS-BUILT" DRAWINGS DURING THE MAINTENANCE PERIOD.
2. CONTRACTOR SHALL REMOVE ALL THE TEMPORARY PROTECTIVE FENCING THAT THEY INSTALLED AND IRRIGATION SYSTEM COMPONENTS AT THE END OF THE CONTRACT.
3. SEE THE GENERAL NOTES AND PROJECT SPECIFICATIONS FOR ADDITIONAL INFORMATION

TARGETED REMOVAL OF INVASIVE PLANTS

1. THE CONTRACTOR SHALL CONDUCT TARGETED WOODY INVASIVE PLANT TREATMENT AND REMOVAL WITHIN EXISTING RIPARIAN FOREST AREAS TO BE PRESERVED AND ENHANCED WITHIN THE PROJECT SITE.
2. FOLLOWING TARGETED INVASIVE PLANT REMOVAL EVENTS AND RETREATMENTS (AS NECESSARY), ANY UNVEGETATED UNDERSTORY AREAS 100 SF OR LARGER WILL BE BROADCAST SEEDED WITH SEED MIX TYPE 3.
3. SEE THE GENERAL NOTES AND PROJECT SPECIFICATIONS FOR ADDITIONAL INFORMATION

ABBREVIATIONS

&	AND
GAL.	GALLON
G.P.H.	GALLONS PER HOUR
G.P.M.	GALLONS PER MINUTE
MIN.	MINIMUM
N.T.S.	NOT TO SCALE
O.C.	ON CENTER
PLS	PURE LIVE SEED
SF	SQUARE FEET
TYP.	TYPICAL

XXXXXXX\XXX.DWG
XX/XX/XX

Issue No.	Description	Date	Drwn.	Chkd.	Resp. Engr.	Proj. Mgr.
–	–	–	–	–	–	–

HORIZONTAL DATUM IS THE CALIFORNIA COORDINATE SYSTEM, ZONE 2 (NAD 83)

VERTICAL DATUM IS NAVD 88

EL NAVD 88 =
EL NGVD 29+2.6'

GEI Consultants
2868 PROSPECT PARK DRIVE
SUITE 400
RANCHO CORDOVA, CA 95670
(916)631-4500

HDR Engineering, Inc.

BAR LENGTH ON ORIGINAL DRAWING EQUALS ONE INCH. ADJUST SCALE ACCORDINGLY.

Project Manager: T. CHAPMAN
Designed: J.BURT
Designed: X
Checked: V. HOWARD
Drawn: C. MAXWELL

SACRAMENTO-SAN JOAQUIN DELTA CONSERVANCY
BEES LAKES HABITAT RESTORATION PROJECT

90% DESIGN

PLANTING NOTES

Date	Project No.	Drawing No.	Issue
OCTOBER 2023	XX-XXXXX-XXXXXX	L-01	X
Scale: AS NOTED	File Name: XXXXX.DWG		

PLANTING PALETTES

PLANTING PALETTE 1 - MIXED RIPARIAN WOODLAND ESTABLISHMENT AREAS

BOTANICAL NAME	COMMON NAME	PLANT SIZE	QUANTITY AREA A	QUANTITY AREA B
OVERSTORY SPECIES				
ACER NEGUNDO	BOXELDER	TREEPOT 4 OR 1 GAL	5	10
FRAXINUS LATIFOLIA	OREGON ASH	TREEPOT 4 OR 1 GAL	11	20
PLATANUS RACEMOSA	CALIFORNIA SYCAMORE	TREEPOT 4 OR 1 GAL	26	49
POPULUS FREMONTII	FREMONT COTTONWOOD	TREEPOT 4 OR 1 GAL	42	78
SALIX GOODDINGII	BLACK WILLOW	TREEPOT 4 OR 1 GAL	11	20
SALIX LASIOLEPIS	ARROYO WILLOW	TREEPOT 4 OR 1 GAL	11	20
UNDERSTORY SPECIES				
BACCHARIS PILULARIS	COYOTE BRUSH	TREE BAND OR TREEPOT 4	11	20
BACCHARIS SALICIFOLIA	MULEFAT	TREEPOT 4 OR 1 GAL	32	59
CERCIS OCCIDENTALIS	WESTERN REDBUD	TREEPOT 4 OR 1 GAL	11	20
FRANGULA CALIFORNICA	CALIFORNIA COFFEEBERRY	TREEPOT 4	32	59
HETEROMELES ARBUTIFOLIA	TOYON	TREEPOT 4 OR 1 GAL	21	39
COMPANION PLANTINGS				
ASCLEPIAS FASCICULARIS	NARROW-LEAVED MILKWEED	PLUG OR RHIZOME	54	101
ASCLEPIAS SPECIOSA	SHOWY MILKWEED	PLUG OR RHIZOME	54	101
ROSA CALIFORNICA	CALIFORNIA ROSE	TREE BAND OR TREEPOT 4	28	52
RUBUS URSINUS	CALIFORNIA BLACKBERRY	TREE BAND OR TREEPOT 4	56	105

NOTES:
1. UNDERSTORY SPECIES TO ALTERNATE WITH OVERSTORY SPECIES WITHIN PLANTING ROWS, SUCH THAT NO OVERSTORY PLANT WOULD BE PLANTED WITHIN 20 FEET OF ANOTHER OVERSTORY PLANT.
2. ONE CALIFORNIA ROSE PLANT TO BE PLANTED AS A COMPANION PLANTING WITH EACH ARROYO WILLOW AND EACH BLACK WILLOW.
3. ONE CALIFORNIA BLACKBERRY PLANT TO BE PLANTED AS A COMPANION PLANTING WITH EACH FREMONT COTTONWOOD.
4. NARROW-LEAVED MILKWEED AND SHOWY MILKWEED TO BE PLANTED AS COMPANION PLANTS WITH ALL OVERSTORY AND UNDERSTORY PLANTS IN THE OUTER PLANTING ROWS OF EACH WOODLAND AREA; REMAINING MILKWEED PLANTS TO BE PLANTED AS COMPANION PLANTS TO MULEFAT AND/OR COYOTEBRUSH IN INTERIOR PLANTING ROWS.
5. SEE SHEET L-03 AND L-04 FOR PLANTING AND LAYOUT DETAILS.

PLANTING PALETTE 2 - FLOATING WETLAND ISLANDS

BOTANICAL NAME	COMMON NAME	PLANT SIZE	QUANTITY ISLAND A	QUANTITY ISLAND B	QUANTITY ISLAND C
GROUP 1 - LOW-STATURE WETLAND					
AGROSTIS EXARATA	SPIKE BENTGRASS	TREEBAND	29	29	18
CAREX PRAEGRACILIS	SLENDER SEDGE	TREEBAND	36	36	20
DISTICHLIS SPICATA	SALTGRASS	TREEBAND	73	73	35
ERYTHRANTHRE CARDINALIS	CARDINAL MONKEY FLOWER	TREEBAND	15	15	12
JUNCUS XIPHIOIDES	IRISLEAFED RUSH	TREEBAND	65	65	30
GROUP 2 - MID-STATURE WETLAND					
ARTEMISIA DOUGLASIANA	MUGWORT	TREEBAND	36	36	17
ASCLEPIAS FASCICULARIS	NARROW-LEAF MILKWEED	TREEBAND	7	12	10
ASCLEPIAS SPECIOSA	SHOWY MILKWEED	TREEBAND	15	15	10
CAREX BARBARAE	SANTA BARBARA SEDGE	TREEBAND	58	58	28
ELEOCHARIS MACROSTACHYA	COMMON SPIKERUSH	TREEBAND	44	44	21
ELYMUS TRITICOIDES	CREEPING WILDRYE	TREEBAND	58	58	28
EUTHAMIA OCCIDENTALIS	WESTERN GOLDENROD	TREEBAND	36	42	18
HORDEUM BRACHYANTHERUM	MEADOW BARLEY	TREEBAND	58	58	28
JUNCUS BALTICUS	BALTIC RUSH	TREEBAND	44	58	22
JUNCUS EFFUSUS	COMMON RUSH	TREEBAND	44	58	22
GROUP 3 - TALL MARSH					
CAREX NEBRASCENSIS	NEBRASKA SEDGE	TREEBAND	65	38	16
HELIANTHUS CALIFORNICUS	CALIFORNIA SUNFLOWER	TREEBAND	7	5	12
SCHOENOPLECTUS CALIFORNICUS	CALIFORNIA BULRUSH	1 GALLON, SPLIT INTO 2 PARTS IN FIELD	36	24	0
GROUP 4 - SANDBAR WILLOW					
SALIX EXIGUA	SANDBAR WILLOW	1 GALLON	1	2	0

NOTES:
1. PLANTS TO BE PLANTED IN 4" DIAMETER X 8" DEEP DRILLED PLANTING POCKETS IN FLOATING ISLAND, IN A HIGH QUALITY HYDROPONIC GROWING MEDIUM SUCH AS COCO COIR (SEE SHEET L-0X AND SPECIFICATIONS FOR MORE INFORMATION).
2. PLANTING POCKETS AT SANDBAR WILLOW PLANTING LOCATIONS TO BE ENLARGED TO 6" DIAMETER SIZE.
3. LOW STATURE WETLAND PLANTS (GROUP 1) TO BE PLANTED PRIMARILY ALONG ISLAND EDGES; TALL MARSH (GROUP 3) PLANTS TO BE PLANTED IN A SINGLE CLUSTER WITHIN INTERIOR OF LARGER ISLANDS; SANDBAR WILLOWS TO BE PLANTED WITHIN MID-STATURE WETLAND (GROUP 2) PLANTINGS ON LARGE ISLANDS, AND WHERE MORE THAN ONE WILLOW PLANTED, WILLOWS TO BE SPACED AT LEAST 15 FEET APART.
4. WITHIN EACH PLANTING ZONE, PLANTS (EXCEPT SANDBAR WILLOW) TO BE GROUPED IN CLUSTERS OF 3-8 PLANTS BY SPECIES.
5. SEE SHEETS L-03 AND L-05 FOR PLANTING AND LAYOUT DETAILS.

SEED MIXES

SEED MX - TYPE 1

BOTANICAL NAME	COMMON NAME	DRILL SEEDING SEEDING RATE (PLS* LBS/ACRE)
ACHILLEA MILLEFOLIUM	YARROW	0.2
AGROSTIS EXARATA	SPIKE BENTGRASS	0.1
ARTEMESIA DOUGLASIANA	CALIFORNIA MUGWORT	0.3
CLARKIA WILLIAMSONII	FORT MILLER CLARKIA	0.3
ELYMUS GLAUCUS	BLUE WILDRYE	5
ELYMUS TRACHYCAULUS SSP. TRACHYCAULUS	SLENDER WHEATGRASS	4
ELYMUS TRITICOIDES	CREEPING WILDRYE	3.5
ESCHSCHOLZIA CALIFORNICA	CALIFORNIA POPPY	0.5
GRINDELIA CAMPORUM	COMMON GUMPLANT	0.5
HORDEUM BRACHYANTHERUM	MEADOW BARLEY	5
LUPINUS BICOLOR	MINIATURE LUPINE	1
OENOTHERA ELATA	HOOKER'S EVENING PRIMROSE	0.4
PHACELIA TANACETIFOLIA	TANSY LEAFED PHACELIA	0.4
SOLIDAGO CANADENSIS	CANADA GOLDENROD	0.3
STIPA PULCHRA	PURPLE NEEDLEGRASS	3
VERBENA LASIOSTACHYS	WESTERN VERBENA	0.5
APPLICATION RATE		**25.0**

NOTES:
*PLS = PURE LIVE SEED
SEEDING RATES FOR TYPE 1 SEED MIX ASSUME DRILLSEEDING APPLICATION METHOD.
SEED MIX TYPE 1 TO BE SEEDED IN THE MIXED RIPARIAN WOODLAND ESTABLISHMENT AREAS.

SEED MIX - TYPE 2

BOTANICAL NAME	COMMON NAME	DRILLSEEDING SEEDING RATE (PLS* LBS/ACRE)	BROADCAST SEEDING RATE (PLS* LBS/ACRE)
ACHILLEA MILLEFOLIUM	YARROW	0.2	0.4
AMSINCKIA MENZIESII	SMALL FLOWERED FIDDLENECK	0.2	0.4
BROMUS CARINATUS	CALIFORNIA BROME	1	2
CLARKIA WILLIAMSONII	FORT MILLER CLARKIA	0.3	0.6
ELYMUS GLAUCUS	BLUE WILDRYE	5	10
ELYMUS TRACHYCAULUS SSP. TRACHYCAULUS	SLENDER WHEATGRASS	4	8
ESCHSCHOLZIA CALIFORNICA	CALIFORNIA POPPY	0.5	1
GRINDELIA CAMPORUM	COMMON GUMPLANT	0.5	1
HORDEUM BRACHYANTHERUM SSP. CALIFORNICUM	CALIFORNIA BARLEY	4	8
LASTHENIA CALIFORNICA	CALIFORNIA GOLDFIELDS	0.5	1
LUPINUS BICOLOR	MINIATURE LUPINE	1	2
PHACELIA TANACETIFOLIA	TANSY LEAFED PHACELIA	0.2	0.4
POA SECUNDA SSP. SECUNDA	ONE-SIDED BLUEGRASS	0.5	1
STIPA PULCHRA	PURPLE NEEDLEGRASS	4	8
SYMPHYOTRICHUM CHILENSE	PACIFIC ASTER	0.5	1
APPLICATION RATE		**22.4**	**44.8**

NOTES:
*PLS = PURE LIVE SEED
MOST AREAS TO BE SEEDED WITH TYPE 2 SEED MIX WOULD REQUIRE BROADCAST SEEDING DUE TO INACCESSIBILITY FOR DRILLSEEDING EQUIPMENT. FOR AREAS DETERMINED TO BE ACCESSIBLE WITH DRILLSEEDING EQUIPMENT, DRILLSEEDING SEEDING RATE PROVIDED MAY BE USED.
SEED MIX - TYPE 2 TO BE SEEDED IN GRASSLAND TEMPORARY IMPACT AREAS.

SEED MIXES CONTINUED

SEED MIX - TYPE 3

BOTANICAL NAME	COMMON NAME	BROADCAST SEEDING RATE (PLS* LBS/ACRE)
ACHILLEA MILLEFOLIUM	YARROW	0.4
AGROSTIS EXARATA	SPIKE BENTGRASS	0.2
ARTEMESIA DOUGLASIANA	CALIFORNIA MUGWORT	0.5
BACCHARIS GLUTINOSA	MARSH BACCHARIS	0.4
BACCHARIS PILULARIS	COYOTE BRUSH	0.4
BACCHARIS SALICIFOLIA SSP. SALICIFOLIA	MULEFAT	0.4
CLARKIA WILLIAMSONII	FORT MILLER CLARKIA	0.6
ELYMUS GLAUCUS	BLUE WILDRYE	8
ELYMUS TRACHYCAULUS SSP. TRACHYCAULUS	SLENDER WHEATGRASS	8
ELYMUS TRITICOIDES	CREEPING WILDRYE	7
ESCHSCHOLZIA CALIFORNICA	CALIFORNIA POPPY	1
GRINDELIA CAMPORUM	COMMON GUMPLANT	1
HORDEUM BRACHYANTHERUM	MEADOW BARLEY	8
LUPINUS BICOLOR	MINIATURE LUPINE	2
OENOTHERA ELATA	HOOKER'S EVENING PRIMROSE	0.8
PHACELIA TANACETIFOLIA	TANSYLEAFED PHACELIA	0.8
SOLIDAGO CANADENSIS	CANADA GOLDENROD	0.6
STIPA PULCHRA	PURPLE NEEDLEGRASS	5
VERBENA LASIOSTACHYS	WESTERN VERBENA	1
APPLICATION RATE		**46.1**

NOTES:
*PLS = PURE LIVE SEED
ALL AREAS RECEIVING TYPE 3 SEED MIX WILL BE BROADCAST SEEDED.
SEED MIX - TYPE 3 TO BE SEEDED IN RIPARIAN UNDERSTORY TEMPORARY IMPACT AREAS.

XXXXXXX\XXX.DWG
XX/XX/XX

Issue No.	Description	Date	Drwn.	Chkd.	Resp. Engr.	Proj. Mgr.
–	–	–	–	–	–	–

HORIZONTAL DATUM IS THE CALIFORNIA COORDINATE SYSTEM, ZONE 2 (NAD 83)

VERTICAL DATUM IS NAVD 88

EL NAVD 88 =
EL NGVD 29+2.6'

GEI Consultants
2868 PROSPECT PARK DRIVE
SUITE 400
RANCHO CORDOVA, CA 95670
(916)631-4500

HDR Engineering, Inc.

BAR LENGTH ON ORIGINAL DRAWING EQUALS ONE INCH. ADJUST SCALE ACCORDINGLY.

Project Manager: T. CHAPMAN
Designed: J. BURT
Designed: X
Checked: V.HOWARD
Drawn: S. RAMIREZ

SACRAMENTO-SAN JOAQUIN DELTA CONSERVANCY
BEES LAKES HABITAT RESTORATION PROJECT

90% DESIGN

PLANT AND SEEDING MATRIX

Date	Project No.	Drawing No.	Issue
OCTOBER 2023	XX-XXXXX-XXXXXX	L-02	X
Scale: AS NOTED	File Name: XXXXX.DWG		

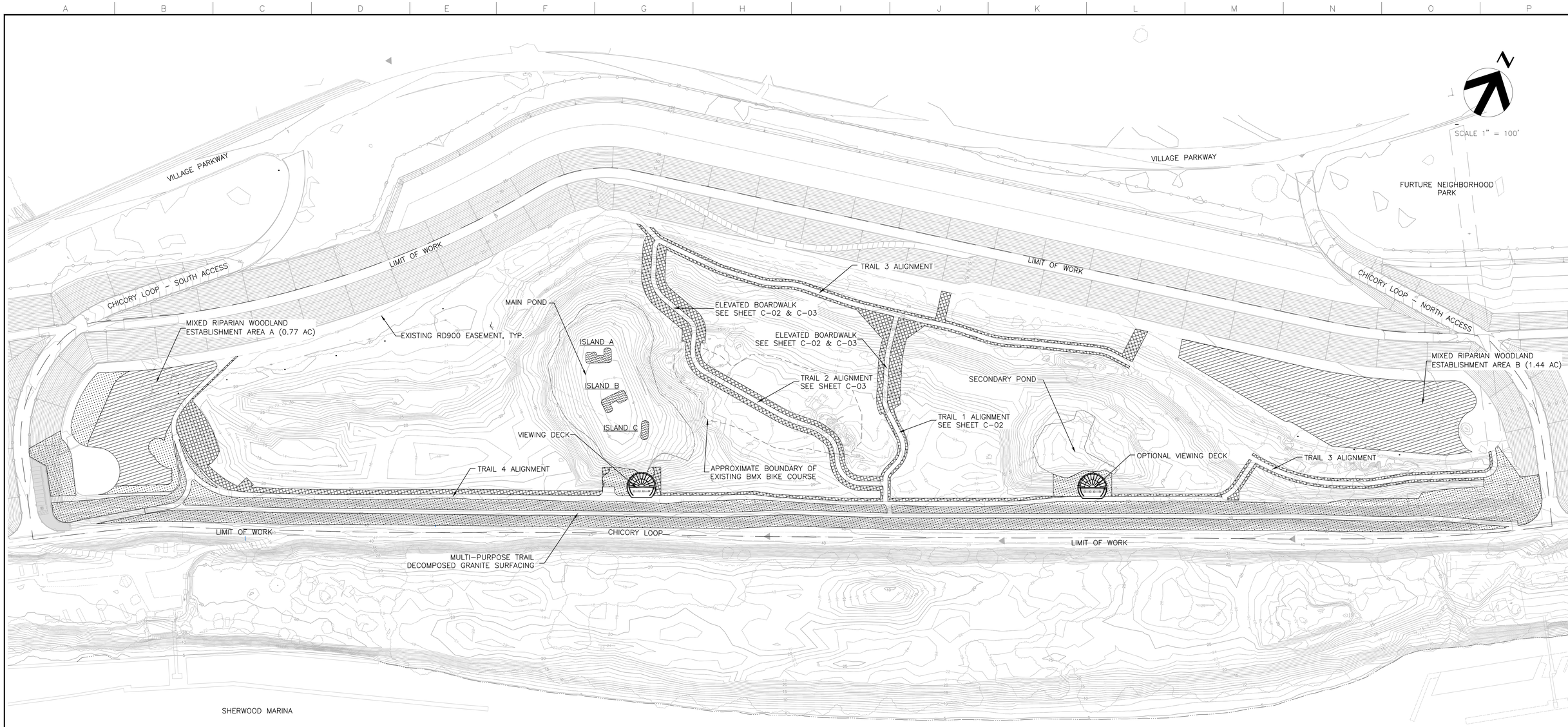

LEGEND:

- MIXED RIPARIAN WOODLAND ESTABLISHMENT AREAS (PLANTING PALETTE 1, SEED MIX TYPE 1)
- GRASSLAND TEMPORARY IMPACT AREAS (SEED MIX TYPE 2)
- RIPARIAN UNDERSTORY TEMPORARY IMPACT AREA (SEED MIX TYPE 3)
- FLOATING ISLANDS (PLANTING PALETTE 2)
- LIMIT OF WORK

NOTES:

1. SEE SHEET L-01 FOR PLANTING NOTES AND ADDITIONAL INFORMATION.
2. SEE SHEET L-02 FOR PLANTING PALETTES AND SEED MIXES.
3. SEE SHEET L-04 AND L-05 FOR PLANTING LAYOUT AND DETAILS.

90% DESIGN

Issue No.	Description	Date	Drwn.	Chkd.	Resp. Engr.	Proj. Mgr.

HORIZONTAL DATUM IS THE CALIFORNIA COORDINATE SYSTEM, ZONE 2 (NAD 83)

VERTICAL DATUM IS NAVD 88

EL NAVD 88 =
EL NGVD 29+2.6'

GEI Consultants
2868 PROSPECT PARK DRIVE
SUITE 400
RANCHO CORDOVA, CA 95670
(916)631-4500

HDR Engineering, Inc.

BAR LENGTH ON ORIGINAL DRAWING EQUALS ONE INCH. ADJUST SCALE ACCORDINGLY.

Project Manager: T. CHAPMAN
Designed: J. BURT
Designed: X
Checked: V. HOWARD
Drawn: C. MAXWELL

SACRAMENTO-SAN JOAQUIN DELTA CONSERVANCY
BEES LAKES HABITAT RESTORATION PROJECT

PLANTING PLAN

Date	Project No.	Drawing No.	Issue
OCTOBER 2023	XX-XXXXX-XXXXXX	L-03	X
Scale: 1" = 100'	File Name: XXXXX.DWG		

XXXXXXX\XXX.DWG
XX/XX/XX

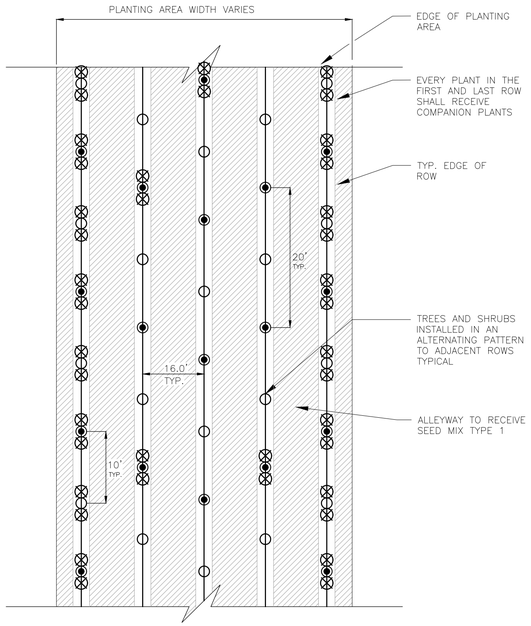

LEGEND:

- ○ = UNDERSTORY SHRUB
- ◉ = OVERSTORY TREE
- ⊗ = COMPANION PLANT
- ▨ = SEED MIX TYPE 1

NOTES:

1. THIS DETAIL REPRESENTS A TYPICAL PLANT LAYOUT TO BE USED THROUGHOUT THE MIXED RIPARIAN WOODLAND ESTABLISHMENT AREAS; SEE SHEET L-03 FOR PLANTING AREAS.
2. PLANT LAYOUT IS BASED ON PLANTING IN ROWS SET AT 16' ON-CENTER
3. PLANTS SHALL BE INSTALLED IN THE CENTER OF THE ROWS IN A LINEAR SPACING OF 10' ON-CENTER, ALTERNATING OVERSTORY TREE AND UNDERSTORY SHRUB SPECIES SUCH THAT ALL TREES ARE SPACED AT LEAST 20' APART FROM OTHER TREES.
4. PLANTS SHALL BE INSTALLED IN AN ALTERNATING PATTERN TO ADJACENT ROWS.
5. COMPANION PLANTS WILL BE PLANTED IN ASSOCIATION WITH SOME TREE AND SHRUB SPECIES AS DESCRIBED IN MIXED RIPARIAN WOODLAND PLANTING PALETTE (SHEET L-02).
6. TREE SPECIES POPULUS FREMONTII (COTTON WOOD), PLATANUS RACEMOSA (CALIFORNIA SYCAMORE), SHALL BE PLANTED TOGETHER IN CLUSTERS OF THREE TO SIX WITHIN WOODLAND PLANTING AREAS.
7. EXISTING TREES SHALL BE AVOIDED.
8. REFER TO SPECIFICATIONS FOR MORE INFORMATION.
9. SEE THIS SHEET FOR ADDITIONAL PLANTING DETAILS.

TYPICAL PLANT LAYOUT

N.T.S.

1 / L-04

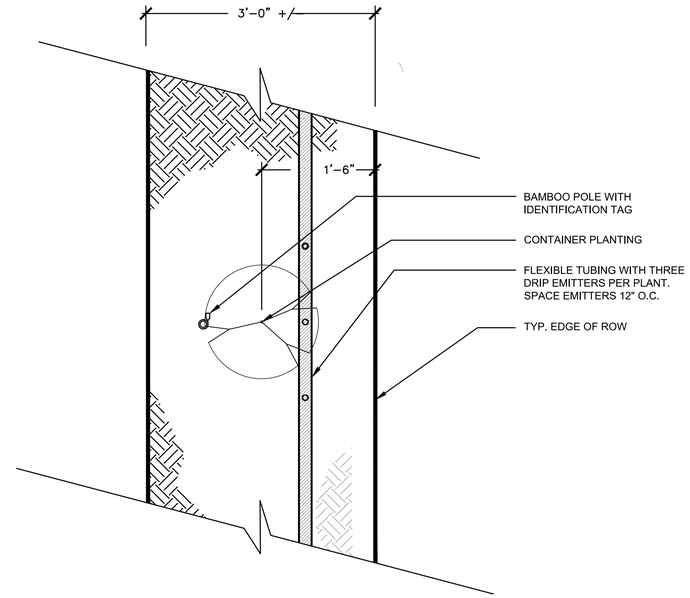

CONTAINER PLANTING – PLAN VIEW

N.T.S.

4 / L-04

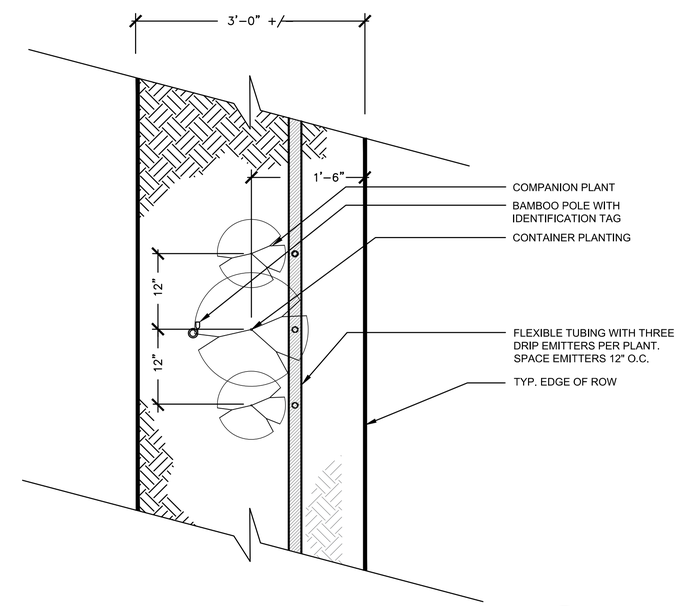

CONTAINER PLANTINGS WITH COMPANIONS

N.T.S.

6 / L-04

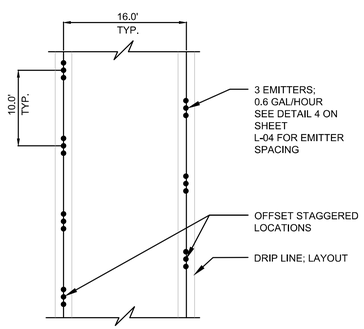

TYPICAL DRIP EMITTER LAYOUT

N.T.S.

2 / L-04

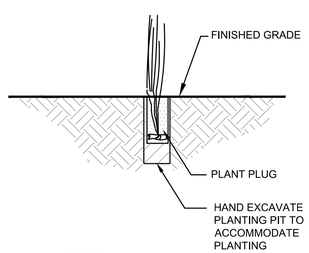

NOTES:

1. REFER TO THE SPECIFICATIONS FOR ADDITIONAL INFORMATION.

PLUG PLANTING

N.T.S.

3 / L-04

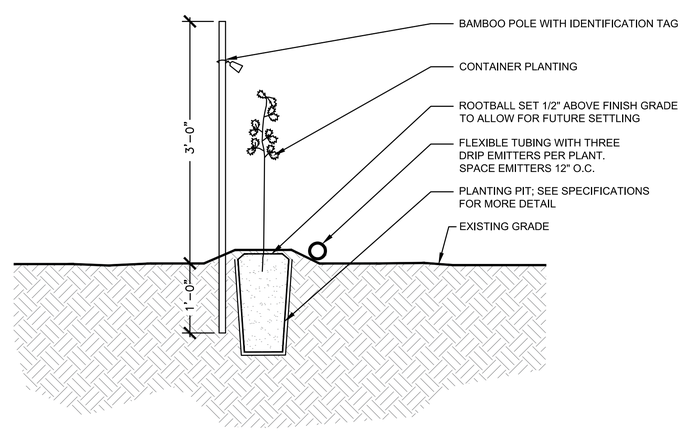

CONTAINER PLANTING – CROSS SECTION

N.T.S.

5 / L-04

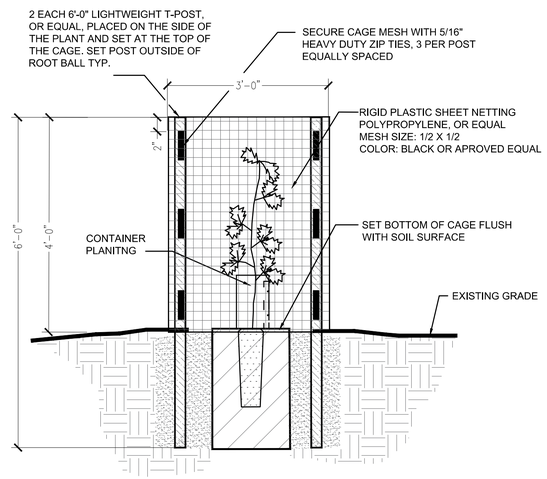

NOTES:

1. INSTALL T-POST IN TWO PLACES FOR BEST FIT TO AVOID INSTALLED IRRIGATION TUBING AND ROOTBALL
2. PLANT PROTECTION CAGE SHALL BE INSTALLED ON SELECTED PLANTS DETERMINED BY CITY DURING THE MAINTENANCE PERIOD.

CONTAINER PROTECTION CAGE

N.T.S.

7 / L-04

XXXXXXX\XXX.DWG
XX/XX/XX

Issue No.	Description	Date	Drwn.	Chkd.	Resp. Engr.	Proj. Mgr.
–	–	–	–	–	–	–

HORIZONTAL DATUM IS THE CALIFORNIA COORDINATE SYSTEM, ZONE 2 (NAD 83)

VERTICAL DATUM IS NAVD 88

EL NAVD 88 =
EL NGVD 29+2.6'

GEI Consultants
2868 PROSPECT PARK DRIVE
SUITE 400
RANCHO CORDOVA, CA 95670
(916)631-4500

HDR Engineering, Inc.

BAR LENGTH ON ORIGINAL DRAWING EQUALS ONE INCH. ADJUST SCALE ACCORDINGLY.

Project Manager: T. CHAPMAN
Designed: J. BURT
Designed: X
Checked: V. HOWARD
Drawn: C. MAXWELL

SACRAMENTO-SAN JOAQUIN DELTA CONSERVANCY
BEES LAKES HABITAT RESTORATION PROJECT

90% DESIGN

RIPARIAN WOODLAND PLANTING DETAILS

Date	Project No.	Drawing No.	Issue
OCTOBER 2023	XX–XXXXX–XXXXXX	L-04	X
Scale: AS NOTED	File Name: XXXXX.DWG		

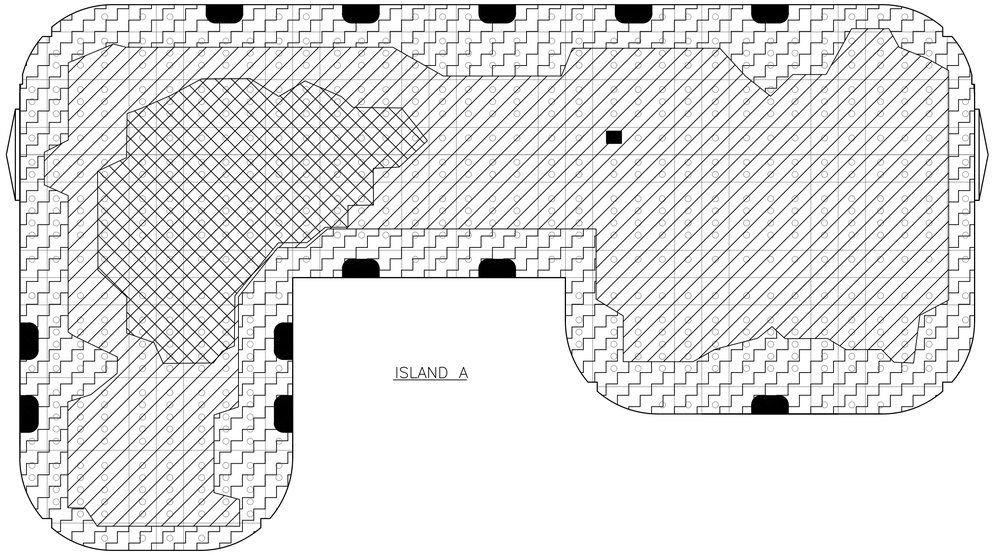

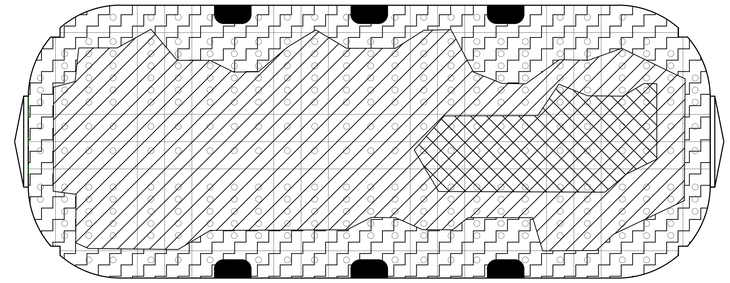

LEGEND:

- LOW SATURATED WETLAND
- MID-SATURATED WETLAND
- TALL MARSH
- SANDBAR WILLOW

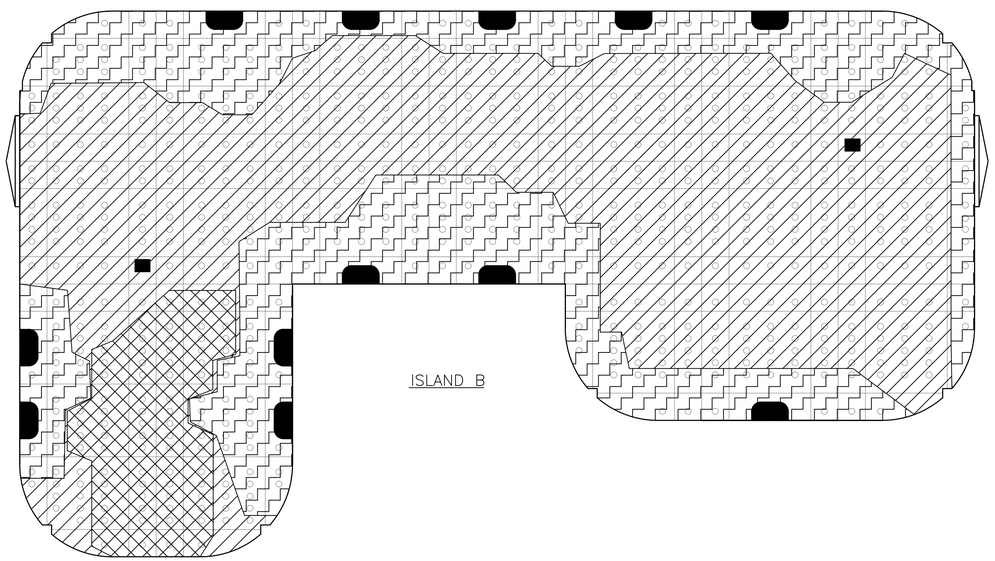

NOTES:
1. SEE SHEET L-02 FOR QUANTITIES AND PLANT PALETTE.

FLOATING WETLAND ISLAND PLANTING LAYOUT DESIGN

N.T.S.

1 / L-05

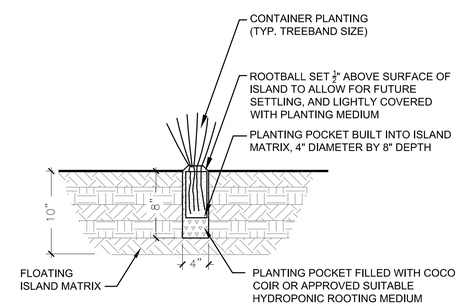

NOTES:

1. CAREFULLY REMOVE MOST POTTING SOIL FROM PLANT ROOTBALL BEFORE PLANTING INTO COCO COIR MEDIUM (OR APPROVED SUBSTITUTE) IN PLANTING POCKET.

2. SEE SPECIFICATIONS FOR MORE DETAIL ON PLANTING MEDIUM.

FLOATING WETLAND ISLAND PLANTING

N.T.S.

2 / L-05

90% DESIGN

Issue No.	Description	Date	Drwn.	Chkd.	Resp. Engr.	Proj. Mgr.
–	–	–	–	–	–	–

HORIZONTAL DATUM IS THE CALIFORNIA COORDINATE SYSTEM, ZONE 2 (NAD 83)

VERTICAL DATUM IS NAVD 88

EL NAVD 88 =
EL NGVD 29+2.6'

GEI Consultants
2868 PROSPECT PARK DRIVE
SUITE 400
RANCHO CORDOVA, CA 95670
(916)631-4500

HDR Engineering, Inc.

BAR LENGTH ON ORIGINAL DRAWING EQUALS ONE INCH. ADJUST SCALE ACCORDINGLY.

Project Manager: T. CHAPMAN
Designed: J. BURT
Designed: X
Checked: V. HOWARD
Drawn: C. MAXWELL

SACRAMENTO-SAN JOAQUIN DELTA CONSERVANCY
BEES LAKES HABITAT RESTORATION PROJECT

FLOATING WETLAND ISLANDS PLANTING DETAILS

Date	Project No.	Drawing No.	Issue
OCTOBER 2023	XX–XXXXX–XXXXXX	L-05	X
Scale: AS NOTED	File Name: XXXXX.DWG		

XXXXXXX\XXX.DWG
XX/XX/XX

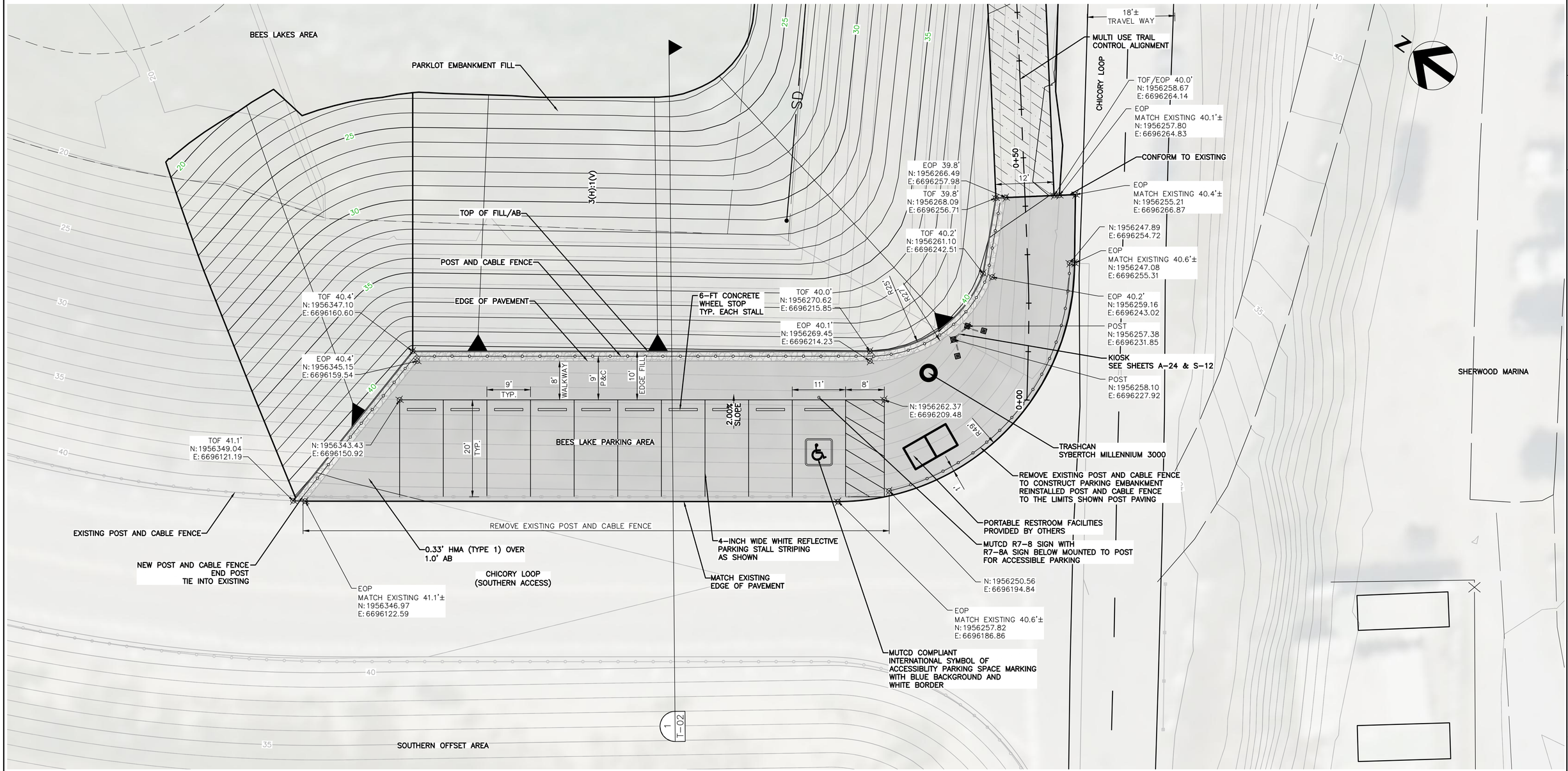

BEES LAKE - PARKING PLAN

1" = 10'

C:\PWWORKING\WEST01\D2918499\T-01.DWG
December 6, 2023

Issue No.	Description	Date	Drwn.	Chkd.	Resp. Engr.	Proj. Mgr.

HORIZONTAL DATUM IS THE CALIFORNIA COORDINATE SYSTEM, ZONE 2 (NAD 83)

VERTICAL DATUM IS NAVD 88

EL NAVD 88 =
EL NGVD 29+2.6'

HDR Engineering, Inc.

BAR LENGTH ON ORIGINAL DRAWING EQUALS ONE INCH. ADJUST SCALE ACCORDINGLY.

Project Manager: K. JAMESON
Designed: V. RUSSO
Designed: X
Checked: K. FELLOWS
Drawn: V. RUSSO

SACRAMENTO-SAN JOAQUIN DELTA CONSERVANCY
BEES LAKES HABITAT RESTORATION PROJECT

90% DESIGN

BEES LAKES PARKING AREA SITE PLAN

Date	Project No.	Drawing No.	Issue
NOVEMBER, 2023	3223-10358905	T-01	X
Scale: 1" = 10'	File Name: T-01.DWG		

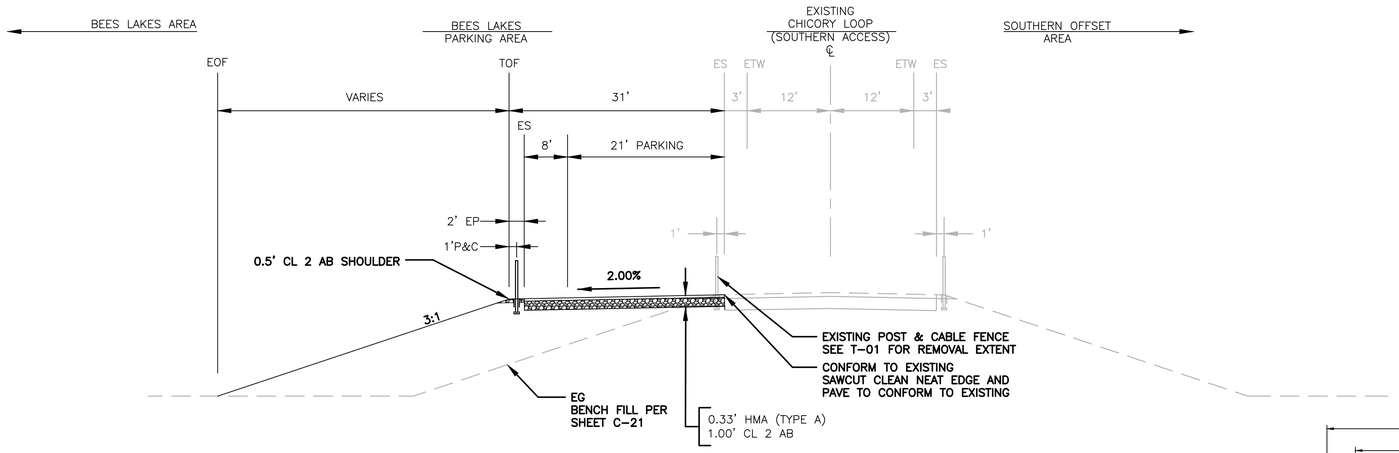

BEES LAKES – PARKING AREA TYPICAL SECTION (1 / –)

SCALE: NTS

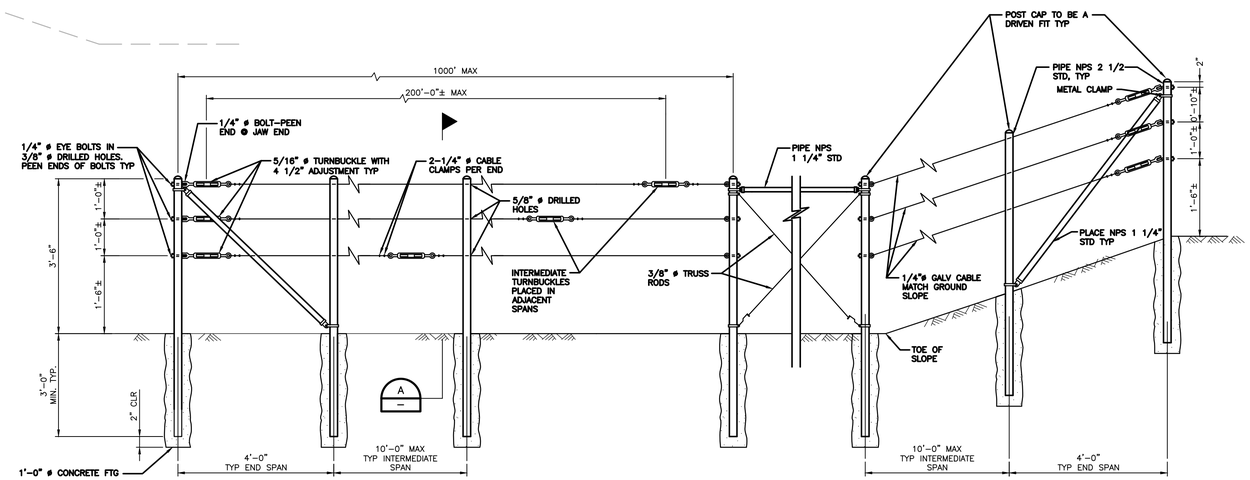

ON BERM OR LEVEE SLOPE

POST AND CABLE BARRIER FENCE
ELEVATION

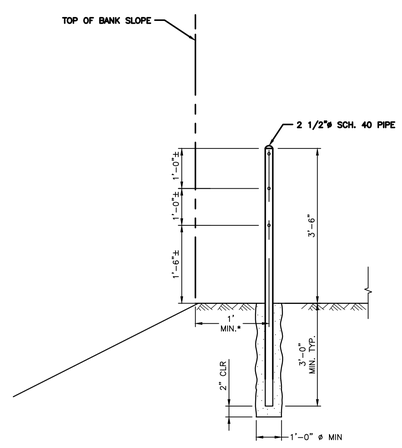

SECTION (A / –)

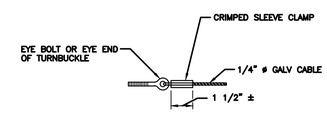

ALTERNATIVE CABLE CONNECTION

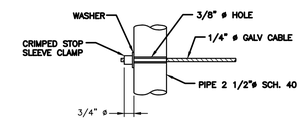

ALTERNATIVE DEAD END ANCHORAGE

POST & CABLE FENCE DETAILS (2 / –)

NTS

NOTES:

1. CABLE SHALL NOT BE SPLICED BETWEEN INTERMEDIATE TURNBUCKLES AND END POSTS.
2. ALL POSTS, CABLE, AND HARDWARE TO BE GALVANIZED.
3. POSTS TO BE VERTICAL AND CONCRETE FOOTINGS SHALL BE CROWNED TO DRAIN AWAY FROM POSTS.
4. ALIGNMENT OF HOLES IN POSTS MAY VARY TO CONFORM TO SLOPE OF FINISH GRADE.
5. THE CONTRACTOR SHALL VERIFY ALL DEPENDENT DIMENSIONS IN THE FIELD BEFORE ORDERING OR FABRICATING ANY MATERIAL.
6. ALTERNATIVE DETAILS MAY BE SUBMITTED BY THE CONTRACTOR FOR APPROVAL BY THE ENGINEER.
7. LINE POSTS SHALL BE BRACED HORIZONTALLY AND TRUSSED DIAGONALLY IN BOTH DIRECTIONS AT INTERVALS NOT TO EXCEED 1000'.
8. TYPICAL END SPANS, BRACED IN BOTH DIRECTIONS, SHALL BE CONSTRUCTED AT CHANGES IN LINE WHERE THE ANGLE OF DEFLECTION IS 15° OR MORE.
9. CONCRETE TO BE F'C = 4000 PSI
10. FENCE POSTS TO BE A53 GRADE 'B' PIPE.

90% DESIGN

Issue No.	Description	Date	Drwn.	Chkd.	Resp. Engr.	Proj. Mgr.

HORIZONTAL DATUM IS THE CALIFORNIA COORDINATE SYSTEM, ZONE 2 (NAD 83)

VERTICAL DATUM IS NAVD 88

EL NAVD 88 = EL NGVD 29+2.6'

HDR Engineering, Inc.

BAR LENGTH ON ORIGINAL DRAWING EQUALS ONE INCH. ADJUST SCALE ACCORDINGLY.

Project Manager: K. JAMESON
Designed: V. RUSSO
Designed: X
Checked: K. FELLOWS
Drawn: V. RUSSO

SACRAMENTO-SAN JOAQUIN DELTA CONSERVANCY
BEES LAKES HABITAT RESTORATION PROJECT

BEES LAKES PARKING AREA SECTIONS

Date	Project No.	Drawing No.	Issue
NOVEMBER, 2023	3223-10358905	T-02	X
Scale: AS NOTED	File Name: T-02.DWG		

C:\PWWORKING\WEST01\D2918499\T-02.DWG
December 6, 2023